HISTORIC AND DESIGN REVIEW COMMISSION
August 02, 2023

HDRC CASE NO:	**2023-283**
ADDRESS:	8802 MISSION RD
LEGAL DESCRIPTION:	NCB 11175 BLK 1 LOT 1 ARMAS DE CORTEZ SUBD
ZONING:	R-6, H, RIO-6
CITY COUNCIL DIST.:	3
DISTRICT:	Mission Historic District
APPLICANT:	Cotton Estes/Cotton Estes Architect PLLC
OWNER:	Rey Saldana
TYPE OF WORK:	Construction of a single-family residential structure & accessory structure
APPLICATION RECEIVED:	July 14, 2023
60-DAY REVIEW:	September 10, 2023
CASE MANAGER:	Edward Hall

REQUEST:

The applicant is requesting a Certificate of Appropriateness for approval to construct a 1-story, single-family residential structure at 8802 Mission Road, located within the Mission Historic District. The proposed new construction will feature a detached accessory structure feature both covered parking and storage space.

APPLICABLE CITATIONS:

Mission Historic District Design Manual

1. Single-family Construction (8-units or less)
This section is intended to supplement the Historic Design Guidelines, Chapter 4, Guidelines for New Construction for various project types.
Projects that are residential in nature, having 8 units or less, should respond to the existing context established in both urban residential neighborhoods as well as rural residential contexts.

A. ROOF FORM
i. Multiple roof forms — Historic housing stock in the Mission Historic District is typically modest in design and features simple, traditional roof forms. The integration of multiple roof forms or non-traditional roof forms in new construction is discouraged unless stylistically appropriate.
ii. Ridge heights — The ridgelines of roofs with multiple gables should be uniform in height; cross gables should intersect at the primary ridgeline unless established as a uniform secondary roof form.
iii. Contemporary roof forms — Contemporary flat roof or shed roof forms may be considered on a case by case basis where the special merits of the overall proposed design warrant a deviation from traditional roof forms.

B. FACADE DESIGN AND ARCHITECTURAL DETAILS
i. Architectural elements — The integration of traditional architectural elements on the front or primary facades of new buildings is encouraged. This may include porches, groupings of windows, or decorative elements.

Historic Design Guidelines, Chapter 4, Guidelines for New Construction

1. Building and Entrance Orientation

A. FAÇADE ORIENTATION
i. Setbacks—Align front facades of new buildings with front facades of adjacent buildings where a consistent setback has been established along the street frontage. Use the median setback of buildings along the street frontage where a variety of setbacks exist. Refer to UDC Article 3, Division 2. Base Zoning Districts for applicable setback requirements.

ii. Orientation—Orient the front façade of new buildings to be consistent with the predominant orientation of historic buildings along the street frontage.

B. ENTRANCES

i. Orientation—Orient primary building entrances, porches, and landings to be consistent with those historically found along the street frontage. Typically, historic building entrances are oriented towards the primary street.

2. Building Massing and Form

A. SCALE AND MASS

i. Similar height and scale—Design new construction so that its height and overall scale are consistent with nearby historic buildings. In residential districts, the height and scale of new construction should not exceed that of the majority of historic buildings by more than one-story. In commercial districts, building height shall conform to the established pattern. If there is no more than a 50% variation in the scale of buildings on the adjacent block faces, then the height of the new building shall not exceed the tallest building on the adjacent block face by more than 10%.

ii. Transitions—Utilize step-downs in building height , wall-plane offsets, and other variations in building massing to provide a visual transition when the height of new construction exceeds that of adjacent historic buildings by more than one-half story.

iii. Foundation and floor heights—Align foundation and floor-to-floor heights (including porches and balconies) within one foot of floor-to-floor heights on adjacent historic structures.

B. ROOF FORM

i. Similar roof forms—Incorporate roof forms—pitch, overhangs, and orientation—that are consistent with those predominantly found on the block. Roof forms on residential building types are typically sloped, while roof forms on nonresidential building types are more typically flat and screened by an ornamental parapet wall.

ii. Façade configuration—The primary façade of new commercial buildings should be in keeping with established patterns. Maintaining horizontal elements within adjacent cap, middle, and base precedents will establish a consistent street wall through the alignment of horizontal parts. Avoid blank walls, particularly on elevations visible from the street. No new façade should exceed 40 linear feet without being penetrated by windows, entryways, or other defined bays.

D. LOT COVERAGE

i. Building to lot ratio—New construction should be consistent with adjacent historic buildings in terms of the building to lot ratio. Limit the building footprint for new construction to no more than 50 percent of the total lot area, unless adjacent historic buildings establish a precedent with a greater building to lot ratio.

3. Materials and Textures

A. NEW MATERIALS

i. Complementary materials—Use materials that complement the type, color, and texture of materials traditionally found in the district. Materials should not be so dissimilar as to distract from the historic interpretation of the district. For example, corrugated metal siding would not be appropriate for a new structure in a district comprised of homes with wood siding.

ii. Alternative use of traditional materials—Consider using traditional materials, such as wood siding, in a new way to provide visual interest in new construction while still ensuring compatibility.

iii. Roof materials—Select roof materials that are similar in terms of form, color, and texture to traditionally used in the district.

iv. Metal roofs—Construct new metal roofs in a similar fashion as historic metal roofs. Refer to the Guidelines for Alterations and Maintenance section for additional specifications regarding metal roofs.

v. Imitation or synthetic materials—Do not use vinyl siding, plastic, or corrugated metal sheeting. Contemporary

materials not traditionally used in the district, such as brick or simulated stone veneer and Hardie Board or other fiberboard siding, may be appropriate for new construction in some locations as long as new materials are visually similar to the traditional material in dimension, finish, and texture. EIFS is not recommended as a substitute for actual stucco.

4. Architectural Details

A. GENERAL
i. Historic context—Design new buildings to reflect their time while respecting the historic context. While new construction should not attempt to mirror or replicate historic features, new structures should not be so dissimilar as to distract from or diminish the historic interpretation of the district.
ii. Architectural details—Incorporate architectural details that are in keeping with the predominant architectural style along the block face or within the district when one exists. Details should be simple in design and should complement, but not visually compete with, the character of the adjacent historic structures or other historic structures within the district.
Architectural details that are more ornate or elaborate than those found within the district are inappropriate.
iii. Contemporary interpretations—Consider integrating contemporary interpretations of traditional designs and details for new construction. Use of contemporary window moldings and door surroundings, for example, can provide visual interest while helping to convey the fact that the structure is new. Modern materials should be implemented in a way that does not distract from the historic structure.

5. Garages and Outbuildings

A. DESIGN AND CHARACTER
i. Massing and form—Design new garages and outbuildings to be visually subordinate to the principal historic structure in terms of their height, massing, and form.
ii. Building size – New outbuildings should be no larger in plan than 40 percent of the principal historic structure footprint.
iii. Character—Relate new garages and outbuildings to the period of construction of the principal building on the lot through the use of complementary materials and simplified architectural details.
iv. Windows and doors—Design window and door openings to be similar to those found on historic garages or outbuildings in the district or on the principle historic structure in terms of their spacing and proportions.
v. Garage doors—Incorporate garage doors with similar proportions and materials as those traditionally found in the district.
B. SETBACKS AND ORIENTATION
i. Orientation—Match the predominant garage orientation found along the block. Do not introduce front-loaded garages or garages attached to the primary structure on blocks where rear or alley loaded garages were historically used.
ii. Setbacks—Follow historic setback pattern of similar structures along the streetscape or district for new garages and outbuildings. Historic garages and outbuildings are most typically located at the rear of the lot, behind the principal building. In some instances, historic setbacks are not consistent with UDC requirements and a variance may be required.
6. Mechanical Equipment and Roof Appurtenances

A. LOCATION AND SITING
i. Visibility—Do not locate utility boxes, air conditioners, rooftop mechanical equipment, skylights, satellite dishes, and other roof appurtenances on primary facades, front-facing roof slopes, in front yards, or in other locations that are clearly visible from the public right-of-way.
ii. Service Areas—Locate service areas towards the rear of the site to minimize visibility from the public right-of-way.

B. SCREENING
i. Building-mounted equipment—Paint devices mounted on secondary facades and other exposed hardware, frames, and piping to match the color scheme of the primary structure or screen them with landscaping.
ii. Freestanding equipment—Screen service areas, air conditioning units, and other mechanical equipment from public

view using a fence, hedge, or other enclosure.
iii. Roof-mounted equipment—Screen and set back devices mounted on the roof to avoid view from public right-of-way.

Historic Design Guidelines, Chapter 5, Guidelines for Site Elements

B. NEW FENCES AND WALLS
i. Design—New fences and walls should appear similar to those used historically within the district in terms of their scale, transparency, and character. Design of fence should respond to the design and materials of the house or main structure.
ii. Location—Avoid installing a fence or wall in a location where one did not historically exist, particularly within the front yard. The appropriateness of a front yard fence or wall is dependent on conditions within a specific historic district. New front yard fences or wall should not be introduced within historic districts that have not historically had them.
iii. Height—Limit the height of new fences and walls within the front yard to a maximum of four feet. The appropriateness of a front yard fence is dependent on conditions within a specific historic district. New front yard fences should not be introduced within historic districts that have not historically had them. If a taller fence or wall existed historically, additional height may be considered. The height of a new retaining wall should not exceed the height of the slope it retains.
iv. Prohibited materials—Do not use exposed concrete masonry units (CMU), Keystone or similar interlocking retaining
wall systems, concrete block, vinyl fencing, or chain link fencing.
v. Appropriate materials—Construct new fences or walls of materials similar to fence materials historically used in the district. Select materials that are similar in scale, texture, color, and form as those historically used in the district, and that are compatible with the main structure. Screening incompatible uses—Review alternative fence heights and materials for appropriateness where residential properties are adjacent to commercial or other potentially incompatible uses.

3. Landscape Design

A. PLANTINGS
i. Historic Gardens— Maintain front yard gardens when appropriate within a specific historic district.
ii. Historic Lawns—Do not fully remove and replace traditional lawn areas with impervious hardscape. Limit the removal of lawn areas to mulched planting beds or pervious hardscapes in locations where they would historically be found, such as along fences, walkways, or drives. Low-growing plantings should be used in historic lawn areas; invasive or large-scale species should be avoided. Historic lawn areas should never be reduced by more than 50%.
iii. Native xeric plant materials—Select native and/or xeric plants that thrive in local conditions and reduce watering usage. See UDC Appendix E: San Antonio Recommended Plant List—All Suited to Xeriscape Planting Methods, for a list of appropriate materials and planting methods. Select plant materials with a similar character, growth habit, and light requirements as those being replaced.
iv. Plant palettes—If a varied plant palette is used, incorporate species of taller heights, such informal elements should be restrained to small areas of the front yard or to the rear or side yard so as not to obstruct views of or otherwise distract from the historic structure.
v. Maintenance—Maintain existing landscape features. Do not introduce landscape elements that will obscure the historic structure or are located as to retain moisture on walls or foundations (e.g., dense foundation plantings or vines) or as to cause damage.

B. ROCKS OR HARDSCAPE
i. Impervious surfaces —Do not introduce large pavers, asphalt, or other impervious surfaces where they were not historically located.
ii. Pervious and semi-pervious surfaces—New pervious hardscapes should be limited to areas that are not highly visible, and should not be used as wholesale replacement for plantings. If used, small plantings should be incorporated into the design.
iii. Rock mulch and gravel - Do not use rock mulch or gravel as a wholesale replacement for lawn area. If used, plantings should be incorporated into the design.

D. TREES
i. Preservation—Preserve and protect from damage existing mature trees and heritage trees. See UDC Section 35-523 (Tree Preservation) for specific requirements.
ii. New Trees – Select new trees based on site conditions. Avoid planting new trees in locations that could potentially cause damage to a historic structure or other historic elements. Species selection and planting procedure should be done in accordance with guidance from the City Arborist.

5. Sidewalks, Walkways, Driveways, and Curbing

A. SIDEWALKS AND WALKWAYS
i. Maintenance—Repair minor cracking, settling, or jamming along sidewalks to prevent uneven surfaces. Retain and repair historic sidewalk and walkway paving materials—often brick or concrete—in place.
ii. Replacement materials—Replace those portions of sidewalks or walkways that are deteriorated beyond repair. Every effort should be made to match existing sidewalk color and material.
iii. Width and alignment—Follow the historic alignment, configuration, and width of sidewalks and walkways. Alter the historic width or alignment only where absolutely necessary to accommodate the preservation of a significant tree.
iv. Stamped concrete—Preserve stamped street names, business insignias, or other historic elements of sidewalks and walkways when replacement is necessary.
v. ADA compliance—Limit removal of historic sidewalk materials to the immediate intersection when ramps are added to address ADA requirements.

B. DRIVEWAYS
i. Driveway configuration—Retain and repair in place historic driveway configurations, such as ribbon drives. Incorporate a similar driveway configuration—materials, width, and design—to that historically found on the site. Historic driveways are typically no wider than 10 feet. Pervious paving surfaces may be considered where replacement is necessary to increase stormwater infiltration.
ii. Curb cuts and ramps—Maintain the width and configuration of original curb cuts when replacing historic driveways. Avoid introducing new curb cuts where not historically found.

7. Off-Street Parking

A. LOCATION
i. Preferred location—Place parking areas for non-residential and mixed-use structures at the rear of the site, behind primary structures to hide them from the public right-of-way. On corner lots, place parking areas behind the primary structure and set them back as far as possible from the side streets. Parking areas to the side of the primary structure are acceptable when location behind the structure is not feasible. See UDC Section 35-310 for district-specific standards.
ii. Front—Do not add off-street parking areas within the front yard setback as to not disrupt the continuity of the streetscape.
iii. Access—Design off-street parking areas to be accessed from alleys or secondary streets rather than from principal streets whenever possible.

B. DESIGN
i. Screening—Screen off-street parking areas with a landscape buffer, wall, or ornamental fence two to four feet high—or a combination of these methods. Landscape buffers are preferred due to their ability to absorb carbon dioxide. See UDC Section 35-510 for buffer requirements.
ii. Materials—Use permeable parking surfaces when possible to reduce run-off and flooding. See UDC Section 35-526(j) for specific standards.
iii. Parking structures—Design new parking structures to be similar in scale, materials, and rhythm of the surrounding historic district when new parking structures are necessary.

Standard Specifications for Windows in Additions and New Construction

Consistent with the Historic Design Guidelines, the following recommendations are made for windows to be used in new construction:

- GENERAL: Windows used in new construction should be similar in appearance to those commonly found within the district in terms of size, profile, and configuration. While no material is expressly prohibited by the Historic Design Guidelines, a high quality wood or aluminum-clad wood window product often meets the Guidelines with the stipulations listed below.
- SIZE: Windows should feature traditional dimensions and proportions as found within the district.
- SASH: Meeting rails must be no taller than 1.25". Stiles must be no wider than 2.25". Top and bottom sashes must be equal in size unless otherwise approved.
- DEPTH: There should be a minimum of 2" in depth between the front face of the window trim and the front face of the top window sash. This must be accomplished by recessing the window sufficiently within the opening or with the installation of additional window trim to add thickness. All windows should be supplied in a block frame and exclude nailing fins which limit the ability to sufficiently recess the windows.
- TRIM: Window trim must feature traditional dimensions and architecturally appropriate casing and sloped sill detail.
- GLAZING: Windows should feature clear glass. Low-e or reflective coatings are not recommended for replacements. The glazing should not feature faux divided lights with an interior grille. If approved to match a historic window configuration, the window should feature true, exterior muntins.
- COLOR: Wood windows should feature a painted finish. If a clad or non-wood product is approved, white or metallic manufacturer's color is not allowed and color selection must be presented to staff.

FINDINGS:

a. The applicant is requesting a Certificate of Appropriateness for approval to construct a 1-story, single-family residential structure at 8802 Mission Road, located within the Mission Historic District. The proposed new construction will feature a detached accessory structure feature both covered parking and storage space.
b. CONTEXT & DEVELOPMENT PATTERN – This lot is currently void of any structures. The immediate, surrounding context features both single-family residential structures, a residential campus, and undeveloped, wooded land.
c. SETBACKS & ORIENTATION – According to the Guidelines for New Construction, the front facades of new buildings are to align with front facades of adjacent buildings where a consistent setback has been established along the street frontage. Additionally, the orientation of new construction should be consistent with the historic examples found on the block. This portion of Mission Road features non-uniform lot configurations with varying setbacks and orientations. Staff finds the applicant's proposal to be appropriate.
d. ENTRANCES – According to the Guidelines for New Construction 1.B.i., primary building entrances should be oriented towards the primary street. The existing lot configuration separates the site of the proposed new construction from the right of way at Mission Road by approximately 600 feet. Staff finds the proposed entrance orientation to be appropriate.
e. SCALE & MASS – Per the Guidelines for New Construction 2.A.i., a height and massing similar to historic structures in the vicinity of the proposed new construction should be used. In residential districts, the height and scale of new construction should not exceed that of the majority of historic buildings by more than one-story. The applicant has proposed for the new construction to feature one story in height. Staff finds this to be appropriate and consistent with the Guidelines.
f. FOUNDATION & FLOOR HEIGHTS – According to the Guidelines for New Construction 2.A.iii., foundation and floor heights should be aligned within one (1) foot of neighboring structure's foundation and floor heights. Houses throughout the Mission District feature varying foundation heights. The applicant has proposed for the structure to feature a slab on grade foundation, with varying portions of the foundation being exposed. Generally, given the limited visibility of the structure from the right of way and the varying foundation heights found within the immediate vicinity, staff finds the proposed foundation height to be appropriate.
g. ROOF FORM – The applicant has proposed roof forms that include both flat and gabled roof forms. Both of the proposed roof forms are found historically within the Mission Historic District. Staff finds the proposed roof forms to be appropriate and consistent with the Guidelines.
h. LOT COVERAGE – The applicant has noted the total proposed impervious cover to be 3,370 square feet. The total lot size is 2.29 acres. Staff finds the proposed lot coverage to be appropriate and consistent with the Guidelines.

i. MATERIALS – The applicant has proposed materials that include lime-based stucco, wood soffits and siding, metal roofing and concrete with exposed aggregate. Each of the proposed materials are found historically within the Mission Historic District. Generally, staff finds them to be appropriate and consistent with both the Guidelines and Mission Historic District Design Manual. The applicant has noted that the proposed standing seam metal roof will feature panels that are 18 inches wide, seams that are 1 inch tall and a crimped ridge seam. Staff finds that the applicant should ensure that all panels are smooth with a standard galvalume finish.
j. WINDOWS – The applicant has proposed aluminum clad wood windows. The applicant has proposed windows to feature fixed and casement profiles. The applicant has proposed two window installation options, both of which staff finds to be appropriate given the context of the lot.
k. WINDOW & DOOR OPENINGS – The applicant has proposed windows feature both casement and fixed profiles featuring varying widths. Many overall sizes feature traditional proportions and are located throughout each façade. Generally, staff finds the proposed fenestration pattern to be appropriate given the site context and the development pattern and construction examples found within the vicinity.
l. ARCHITECTURAL DETAILS – Generally, staff finds the proposed architectural details to be appropriate consistent with the Mission Historic District Design Manual. Staff finds that both the proposed architectural forms and materials are found historically within the Mission Historic District and their use is consistent with the Mission Historic District Design Manual and Guidelines for New Construction.
m. ACCESSORY STRUCTURE – The applicant has proposed to construct a detached, rear accessory structure to the immediate south of the proposed residential structure. The proposed accessory structure will feature both covered parking and storage space and will feature an overall footprint of approximately 600 square feet. The proposed accessory structure will feature materials that include gapped wood siding, stucco, and steel and wood exposed structural elements. Staff finds the proposed materials to be appropriate, in keeping with materials found historically within the district and consistent with the Mission Historic District Design Manual.
n. MECHANICAL EQUIPMENT – The applicant has proposed to locate mechanical equipment where it will be screened by welded wire panels. Staff finds this to be appropriate and consistent with the Guidelines.
o. LANDSCAPING – The applicant has submitted application documents that note the locations of gravel driveways, gravel walkways and fencing. Staff finds this to be appropriate.
p. DRIVEWAY – The applicant has proposed a decomposed granite driveway featuring ten (10) feet in width. Staff finds the proposed driveway to be appropriate and consistent with the Guidelines.
q. ARCHAEOLOGY – The project shall comply with all federal, state, and local laws, rules, and regulations regarding archaeology, as applicable.

RECOMMENDATION:

Staff recommends approval based on findings a through p with the following stipulations:

i. ARCHAEOLOGY – The project shall comply with all federal, state, and local laws, rules, and regulations regarding archaeology, as applicable.

City of San Antonio One Stop

July 27, 2023

1:2,000

0 0.015 0.03 0.06 mi

0 0.0275 0.055 0.11 km

INSPIRATION

"Mission San Juan Capistrano" Painting by Hermann Lungkwitz 1856

The Missions were often surrounded by simple, agragrian homes with gable roofs and masonry walls. Throughout the Missions and their environs, there are many great examples of semi-protected outdoor protected spaces which are often formed by groupings of modest outbuildings and private dwellings. The outdoor spaces between buildings are often where people congregated and communed. For this project we were inspired by a painting by Herman Lungkwitz, which depicts the alluring void spaces between modest solid structures at the Mission San Juan Capistrano.

The concept for 8802 Mission Road is to create communal indoor-outdoor living spaces through the aggregation of small, modest private spaces. Inspired by the solid-void relationships found throughout Mission environs, this basic parti serves the client's desire for privacy between occupants, and strong connections to the site for various outdoor activities. A large, single gable unifies the massing and expresses the hierachy of public/private spaces.

BASIC MASSING

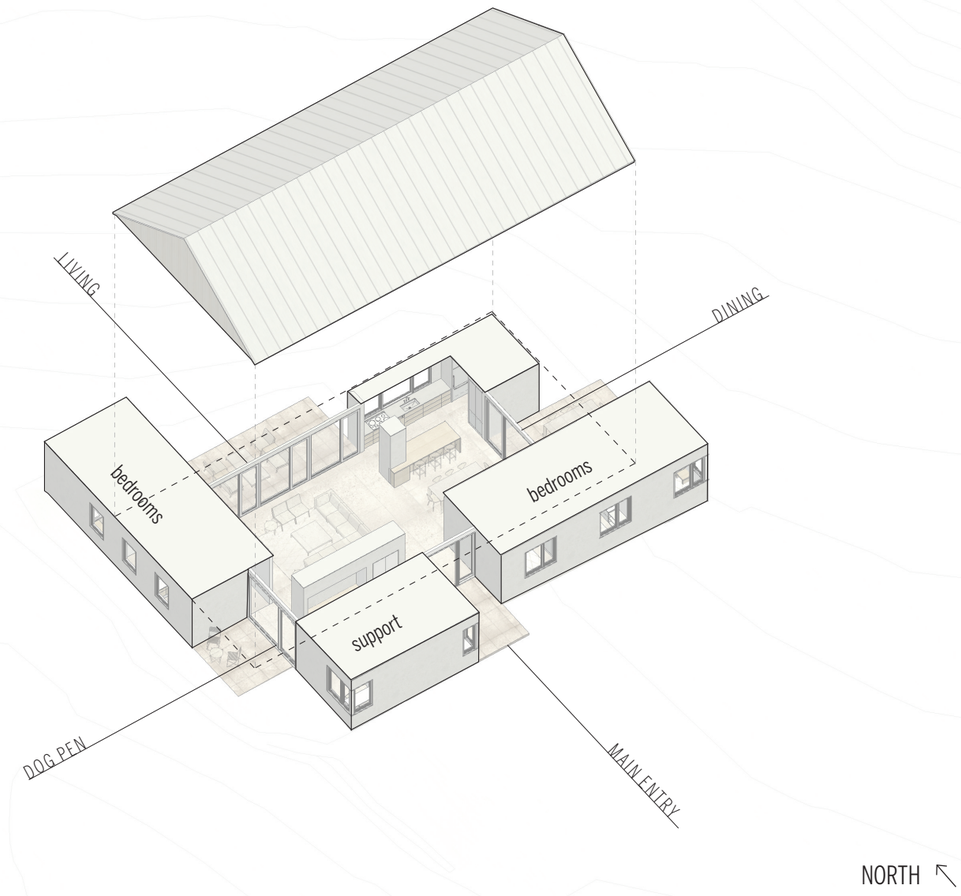

Concept

MISSION HISTORIC DISTRICT
CONSTRUCTION DOCUMENTS
HDRC COA APPLICATION

8802 MISSION ROAD

INSPIRATION

Vernacular agrarian buildings surrounding the Missions often utilized a masonry base level with lightly framed wood roof above, like the Beauregard Ranch (above). These utilitarian structures feature simple, unadorned openings, sometimes including large "dogtrot" openings that extend straight through the interior to provide passive cooling.

MATERIALS & CONSTRUCTION

Understated, elemental forms and natural materials offer a modern interpretation of the historical vernacular. Masonry elements such as lime-based stucco and concrete with exposed limestone aggregate convey rootedness and permanence for the primary volumes. The common living spaces spill into the outdoors, framed by the masonry walls of the private living spaces and the wood frame gable roof above.

lime-based stucco

wood siding & soffit

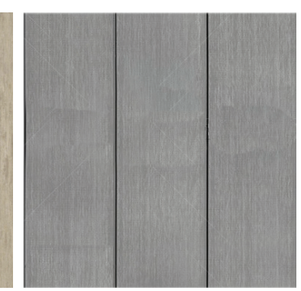

metal roof

concrete w/ exposed aggregate

local gravel

SITE ANALYSIS

1 Western property line is very exposed to the neighbors to the west. The length of the property and power lines are visible from the entrance on Mission Road.

2 First cleared pathway cuts very close to the neighbor's house and yard. It appears to be on or very near to the 8802 Mission Rd. property.

3 The second existing cleared pathway is shaded by Mesquite canopy and feels like you're entering a forest.

4 New growth appears to consist mostly of medium-height semi-deciduous Mesquite, Huisache and Hackberry. There appear to be no significant trees on the property.

5 The site features a gentle slope downward to the north and east with easy access to the acequia's edge at the northern point.

6 Mature, tall and attractive trees border the acequia on the NPS property to the northeast, providing privacy from the maintenance trail.

7 The geotechnical study indicates stable soils that can support an affordable slab-on-grade type foundation (minimal excavation and anticipated settlement).

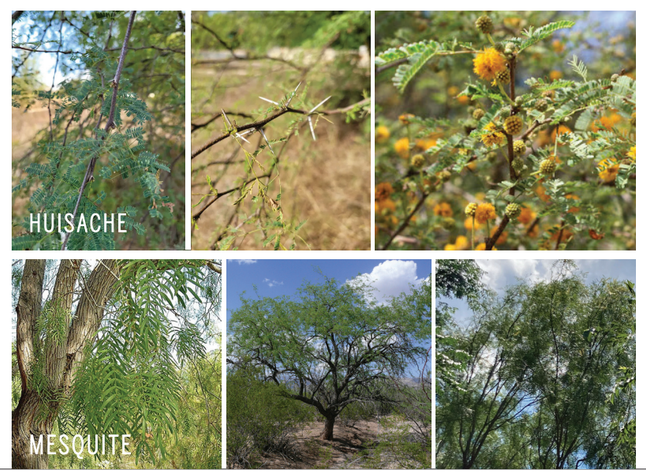

Context

8802 MISSION ROAD

MISSION HISTORIC DISTRICT
CONSTRUCTION DOCUMENTS
HDRC COA APPLICATION

1 Entry off Mission Rd.

2 West prop line looking south

3 Huisache & Mesquite

4 East prop line looking north

5 N prop line looking north

6 West prop line looking west

7 Center of site looking north

Notes:

Site is heavily wooded and visibility at the center of the site is limited. Although no significant trees have been identified on site, effort will be made to preserve healthy trees once the building has been staked and tree locations have been determined. Since the property was clear cut in 2004 (according to sattelite imagery), predominant species consist of Mesquite, Huisache and Hackberry. Heritage trees are located between the eastern and norther property boundary and the acequia.

Context

8802 MISSION ROAD

Zoning:	R-6, RIO-6
Land Area:	2.29 ac
	99926 sf
Impervious Cover Area:	3,370 sf
Conditioned Area:	2,240 sf

TRUE N

0 2' 4' 8' 16'

Site Plan

MISSION HISTORIC DISTRICT
CONSTRUCTION DOCUMENTS
HDRC COA APPLICATION

8802 MISSION ROAD

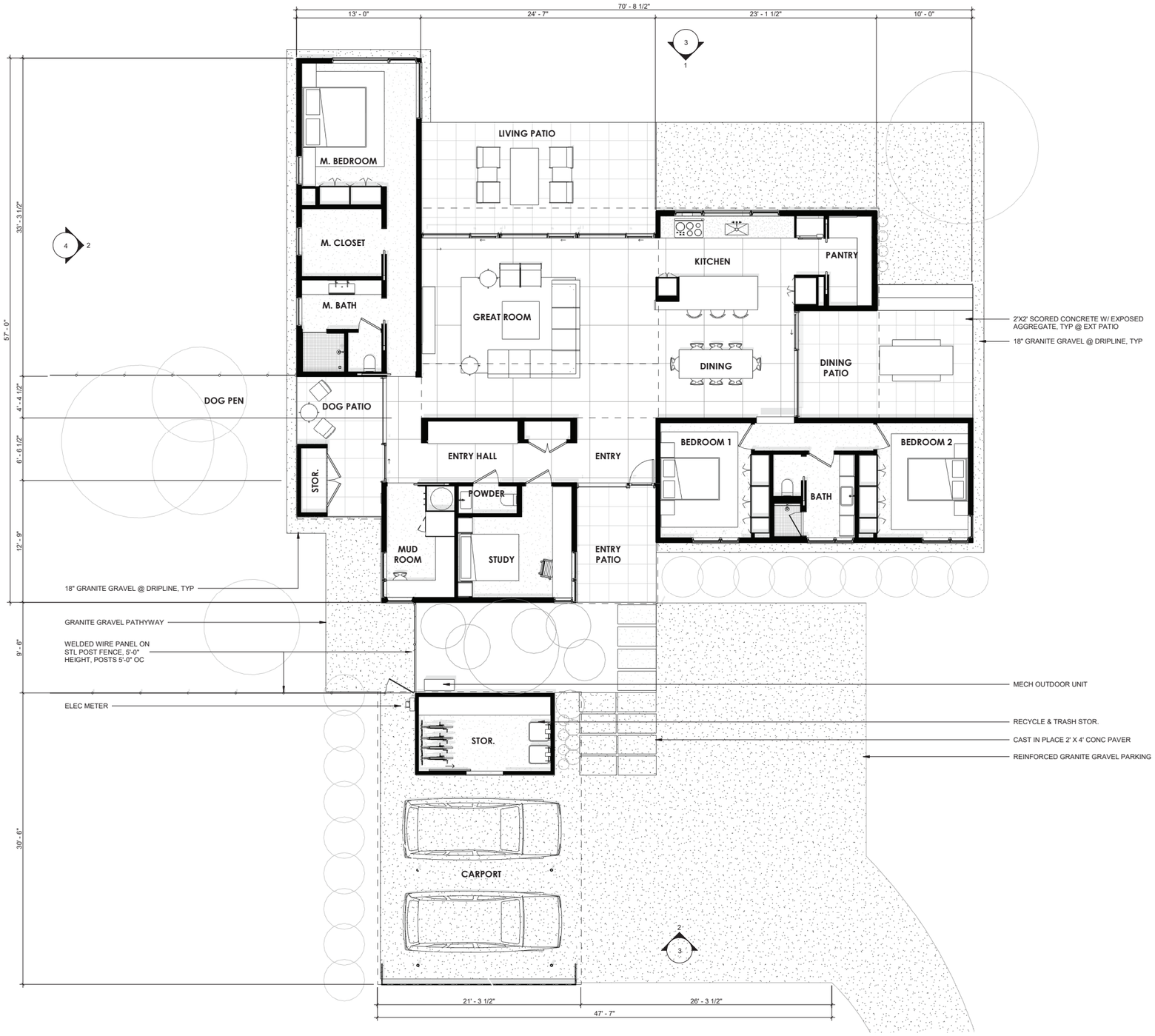

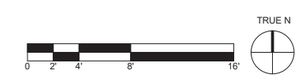

Floor Plan

8802 MISSION ROAD

MISSION HISTORIC DISTRICT
CONSTRUCTION DOCUMENTS
HDRC COA APPLICATION

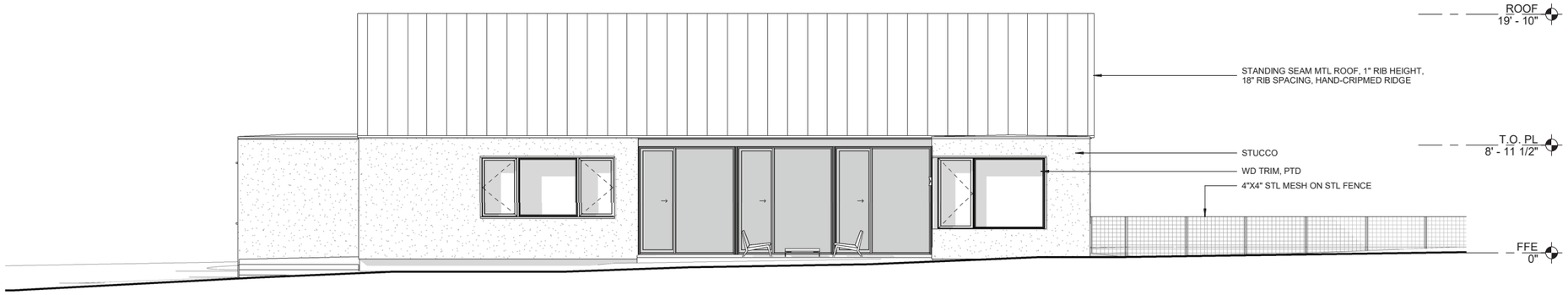

NORTH

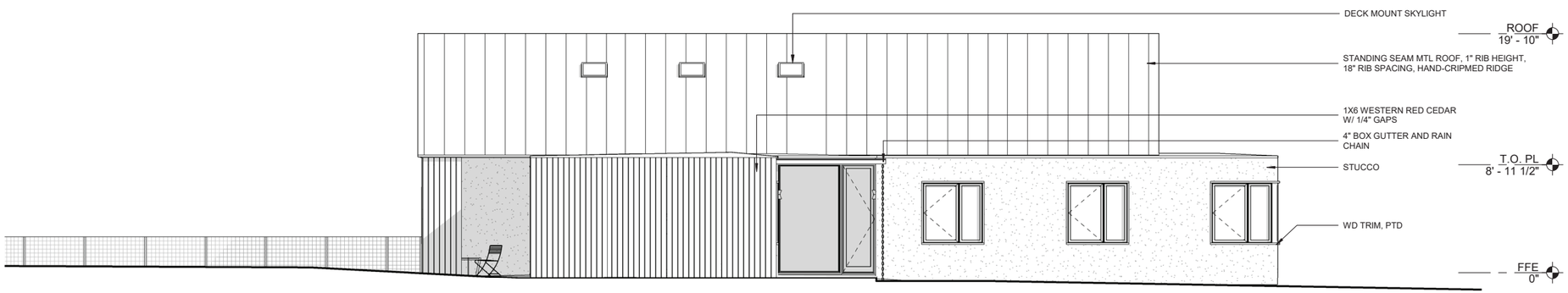

SOUTH

Elevations

8802 MISSION ROAD

MISSION HISTORIC DISTRICT
CONSTRUCTION DOCUMENTS
HDRC COA APPLICATION

EAST

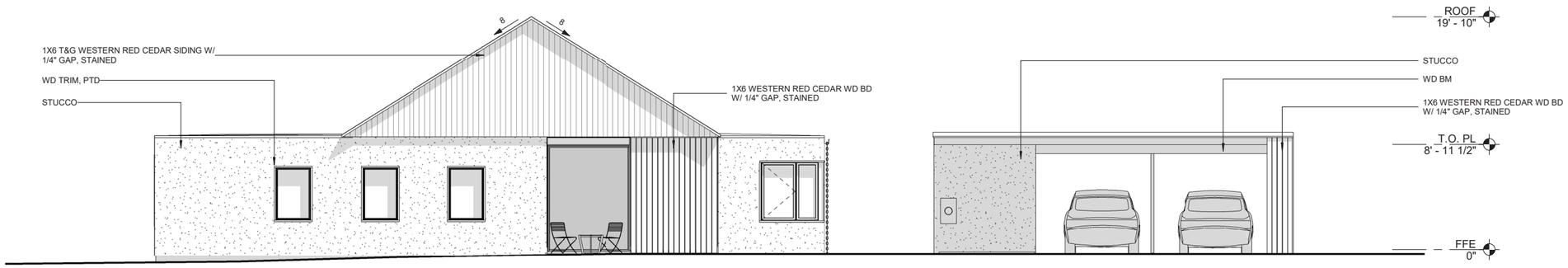

WEST

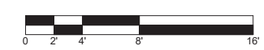

Elevations

MISSION HISTORIC DISTRICT
CONSTRUCTION DOCUMENTS
HDRC COA APPLICATION

8802 MISSION ROAD

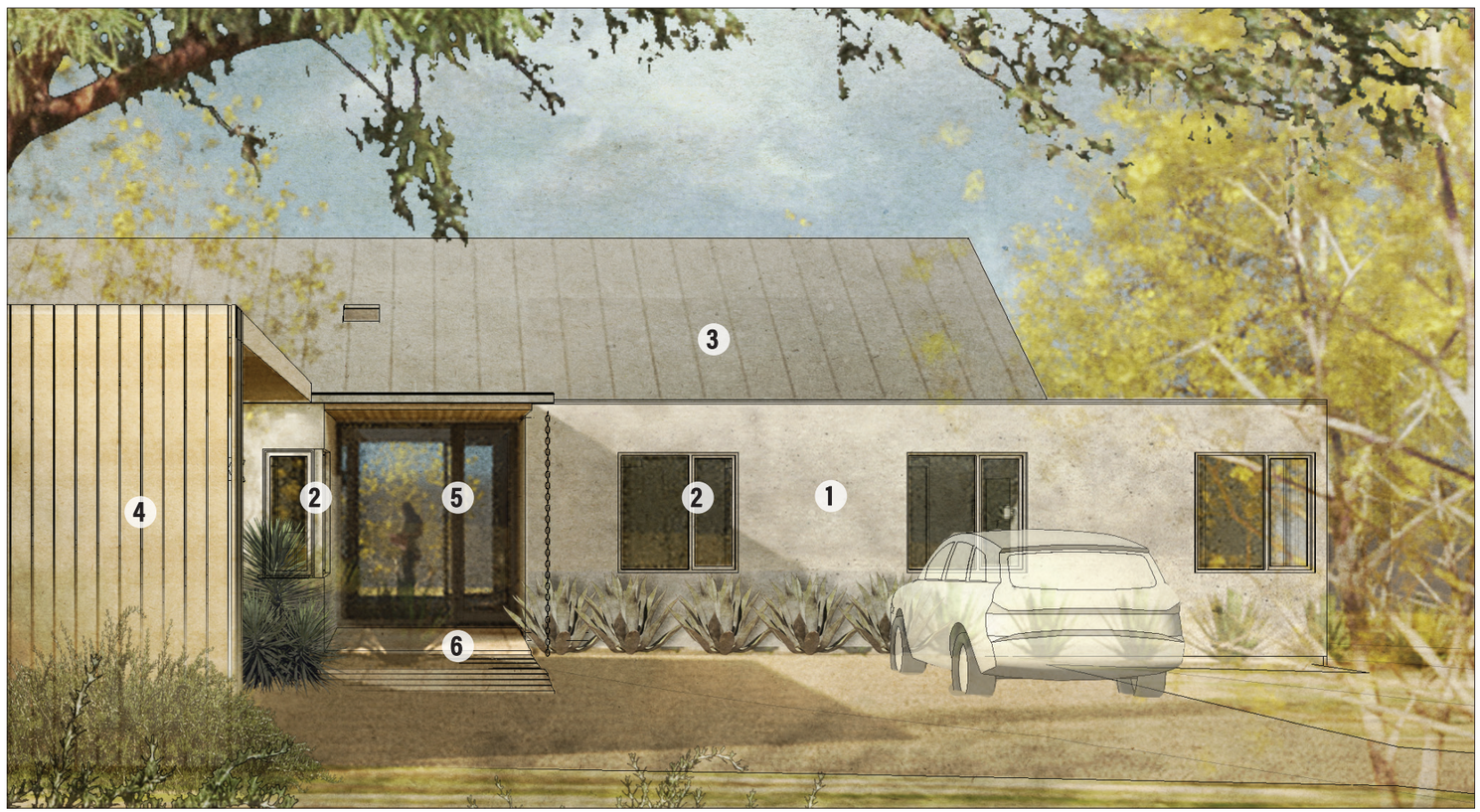

1 STUCCO Vasari's Carrera is made with natural limestone and powdered marble. It contains both fine and coarse sand. Applied thick for a medium to high textured feel, Carrera is used for a rustic old world look with high variation. The proposed color is a light grey with warm undertones (final selection will be made in field based on mock-ups).

2 WINDOW FRAMES Weathershield's Designer Aluminum finishes offer a range of off-whites and light greys to complement the stucco siding. The intent is to de-emphasize the window frame and sash, emulating the simple, unadorned openings found among historic agrarian masonry buildings which emphasize the solidity and weight of the masonry.

3 METAL ROOF The galvalume standing seam metal roof will feature 20" rib spacing with 1" rib height and a hand-crimped ridge. The proposed color is "zinc grey", which has a slightly darker, more matte and weathered appearance compared to a standard galvanized or non-treated galvalume finish.

4 WOOD The gable ends of the roof, soffits, and siding for auxiliary structures like the carport will be made of 1x6 vertical toungue and groove western red cedar. Cedar, which is naturally rot-resistant, will be sealed with a light-tint water-based stain for added protection from the elements.

5 DOOR FRAMES Weathershield's Obsidian Black powder coat aluminum finish emphasizes clear openings between the stucco volumes, where the doors are deeply reccessed inside the face of stucco and under the eaves.

6 CONCRETE Concrete patios will use a local limestone aggregate that complements the stucco siding and gravel areas. The aggregate will be exposed by powerwashing the concrete during the curing process. The concrete will be scored to provide variation in scale as you move through the home.

Specs

8802 MISSION ROAD

MISSION HISTORIC DISTRICT
CONSTRUCTION DOCUMENTS
HDRC COA APPLICATION

Views

8802 MISSION ROAD

MISSION HISTORIC DISTRICT
CONSTRUCTION DOCUMENTS
HDRC COA APPLICATION

Views

8802 MISSION ROAD

MISSION HISTORIC DISTRICT
CONSTRUCTION DOCUMENTS
HDRC COA APPLICATION

Views

8802 MISSION ROAD

MISSION HISTORIC DISTRICT
CONSTRUCTION DOCUMENTS
HDRC COA APPLICATION

Views

8802 MISSION ROAD

MISSION HISTORIC DISTRICT
CONSTRUCTION DOCUMENTS
HDRC COA APPLICATION

ABBREVIATIONS

ABV	ABOVE
AFF	ABOVE FINISHED FLOOR
ADJ	ADJACENT
AN'OD	AN'ODIZED
A/C	AIR CONDITIONING
ALUM	ALUMINUM
ARCH	ARCHITECT (URAL)
BM	BEAM
BTWN	BETWEEN
BD	BOARD
B.S.	BOTH SIDES
BOT	BOTTOM
B.O.B.	BOTTOM OF BEAM
B.O.D.	BOTTOM OF DECK
B.O.S.	BOTTOM OF STEEL
BLDG	BUILDING
CAB	CABINET
CLG	CEILING
CEM	CEMENT
CER	CERAMIC
CIRC	CIRCULAR, CIRCUMFERENCE
CLR	CLEAR
CL	CENTERLINE
COL	COLUMN
CONC	CONCRETE
CONST	CONSTRUCTION
CONT	CONTINUOUS, CONTINUE
CJ	CONTROL JOINT
CNTR	COUNTERTOP
DEMO	DEMOLISH, DEMOLITION
DTL	DETAIL
DIA	DIAMETER
DIM	DIMENSION
DR	DOOR
DH	DOUBLE HUNG
DBL	DOUBLE
DWG	DRAWING
DS	DOWNSPOUT
E	EAST
ELEC	ELECTRIC (AL)
ELEV	ELEVATION
EXIST	EXISTING
EQ	EQUAL
EX	EXHAUST
EQUIP	EQUIPMENT
EXP	EXPOSED
IN	FINISH (ED)
FIN FLR	FINISHED FLOOR
FD	FLOOR DRAIN
FT	FOOT (FEET)
FTG	FOOTING
FDN	FOUNDATION
FUT	FUTURE
GA	GAGE, GAUGE
GALV	GALVALUME
G.C.	GENERAL CONTRACTOR
GYP BD	GYPSUM WALL BOARD
GYP	GYPSUM
HDW	HARDWARE
HDR	HEADER
HVAC	HEATING /VENTILATING/AIR CONDITIONING
HGT	HEIGHT
HC	HOLLOW CORE
HORIZ	HORIZONTAL
INCL	INCLUDE (D), (ING)
INSUL	INSULATION, INSULATING
INT	INTERIOR
LH	LEFT HAND
LA	LANDSCAPE ARCHITECTURE
MSRY	MASONRY
MAX	MAXIMUM
MECH	MECHANICAL
MEMB	MEMBRANE
MTL	METAL
MIN	MINIMUM
MISC	MISCELLANEOUS
N	NORTH
NIC	NOT IN CONTRACT
NTS	NOT TO SCALE
OC	ON CENTER (S)
PG	OPENING
OPP	OPPOSITE
OD	OUTSIDE DIAMETER
PTD	PAINTED
PL	PLATE
PLYWD	PLYWOOD
PROP	PROPERTY LINE
REF	REFER (ENCE)
RECL	RECLAIMED
REFG	REFRIGERATOR
REQ'D	REQUIRED
RH	RIGHT HAND
RO	ROUGH OPENING
SCHED	SCHEDULE
SIM	SIMILAR
SC	SOLID CORE
S	SOUTH
S.SRF	SOLID SURFACE
SPEC	SPECIFICATION, SPECIFIED
SQ	SQUARE
SS	STAINLESS STEEL
STL	STEEL
STOR	STORAGE
STR	STAIR, STRINGER
STRUCT	STRUCTURAL
TEL	TELEPHONE
TV	TELEVISION
T&G	TONGUE AND GROOVE
TM	THERMALLY MODIFIED
T.O.P.	TOP OF PLATE
T.O.S.	TOP OF STEEL
TRANS	TRANSOM
TT	THERMALLY TREATED
TYP	TYPICAL
UNO	UNLESS NOTED OTHERWISE
VERT	VERTICAL
VIF	VERIFY IN FIELD
W	WEST
WIN	WINDOW
W/	WITH
W/O	WITHOUT
WD	WOOD

SYMBOLS

100	DOOR NUMBER
1.1	WINDOW NUMBER
(P1)	PLUMBING FIXTURE NUMBER
(A1)	APPLIANCE NUMBER
(C1)	CABINETRY NUMBER
(L1)	LIGHTING FIXTURE NUMBER
℄	CENTERLINE
ϕ	DIAMETER
- - - - - - -	ALIGN
	ELEVATION MARK - HEIGHT ABOVE REF. ELEV. (0'-0")
1	REVISION NUMBER
1 / 4 A3.0 2 / 3	INTERIOR ELEVATION NUMBER & SHEET NUMBER
1 / A1.2	DETAIL NUMBER / SHEET NUMBER
SIM 2 / A7.0	SIMILAR DETAIL NUMBER / SHEET NUMBER
A4.1 3	SHEET NUMBER / EXTERIOR ELEVATION NUMBER
2 / A7.0	SECTION/ DETAIL NUMBER / SHEET NUMBER

GENERAL PROJECT NOTES

GENERAL PROJECT NOTES

1 REFER TO COMPLETE SET OF ISSUED CONTRACT DOCUMENTS FOR APPLICABLE NOTES, ABBREVIATIONS, AND SYMBOLS.

2 DO NOT SCALE THE DRAWINGS. IF DIMENSIONS ARE IN QUESTION THE CONTRACTOR SHALL BE RESPONSIBLE FOR OBTAINING CLARIFICATION FROM THE ARCHITECT BEFORE CONTINUING.

3 ISOLATE DISSIMILAR METALS TO PREVENT GALVANIC CORROSION.

4 SEALANTS EXPOSED TO VIEW SHALL BE CUSTOM COLOR AS SELECTED BY THE ARCHITECT. COORDINATE LOCATION OF SEALANT AND COMPATIBILITY OF SEALANTS WITH ADJACENT WORK, BUILDING MATERIALS, AND OTHER CONTINUOUS SEALANTS.

5 COMPLY WITH ALL APPLICABLE CODES, LAWS, ORDINANCES, ORDERS, RULES, AND REGULATIONS OF AUTHORITIES HAVING JURISDICTION.

6 REVIEW DOCUMENTS, VERIFY DIMENSIONS AND FIELD CONDITIONS AND CONFIRM THAT WORK IS BUILDABLE AS SHOWN. REPORT ANY CONFLICTS OR OMISSIONS TO THE ARCHITECT FOR CLARIFICATION PRIOR TO PERFORMING ANY WORK IN QUESTION.

7 COORDINATE WORK WITH THE OWNER, INCLUDING SCHEDULING TIME AND LOCATIONS FOR DELIVERIES, BUILDING ACCESS, USE OF BUILDING SERVICES AND FACILITY. MINIMIZE DISTURBANCE OF BUILDING FUNCTIONS AND OCCUPANTS.

8 MAINTAIN WORK AREAS SECURE AND LOCKABLE DURING CONSTRUCTION. COORDINATE WITH OWNER AND/OR PROPERTY MANAGER TO ENSURE SECURITY.

9 MAINTAIN EXITS, EXIT LIGHTING, FIRE PROTECTIVE DEVICES, AND ALARMS IN CONFORMANCE WITH APPLICABLE CODES AND ORDINANCES.

10 EXAMINATION OF THE SITE AND PORTIONS THEREOF THAT AFFECT THIS WORK SHALL BE MADE BY THE GENERAL CONTRACTOR PRIOR TO STARTING WORK, WHO SHALL COMPARE EXISTING CONDITIONS WITH THE CONTRACT DOCUMENTS AND SATISFY HIM/HERSELF AS TO THE EXISTING CONDITIONS UNDER WHICH WORK IS TO BE PERFORMED. CONTRACTOR SHALL AT SUCH TIME ASCERTAIN AND VERIFY THE LOCATIONS OF EXISTING STRUCTURES AND UTILITIES.

11 ALL MANUFACTURED ARTICLES, MATERIALS AND EQUIPMENT SHALL BE INSTALLED, CONNECTED, ERECTED CLEANED, AND CONDITIONED PER THE MANUFACTURER'S INSTRUCTIONS. IN CASE OF DIFFERENCES BETWEEN MANUFACTURER'S INSTRUCTIONS AND THE CONTRACT DOCUMENTS, THE CONTRACTOR SHALL NOTIFY THE ARCHITECT BEFORE PROCEEDING WITH THE WORK IN QUESTION.

12 DAMAGE TO NEW AND EXISTING MATERIALS, FINISHES, STRUCTURES AND EQUIPMENT SHALL BE REPAIRED OR REPLACED TO THE SATISFACTION OF THE OWNER AT THE EXPENSE OF THE CONTRACTOR.

13 CONTRACTOR SHALL REMOVE ALL RUBBISH AND WASTE MATERIALS OF ALL SUBCONTRACTORS AND TRADES ON A DAILY BASIS AND SHALL EXERCISE STRICT CONTROL OVER JOB CLEANING TO PREVENT ANY DIRT, DEBRIS, OR DUST FROM AFFECTING ANY FINISHED AREAS IN OR OUTSIDE THE JOB SITE. BURNING OF DEBRIS ON SITE SHALL NOT BE PERMITTED.

14 CONTRACTOR SHALL NOT PROCEED WITH ANY WORK REQUIRING ADDITIONAL COMPENSATION BEYOND THE CONTRACT AMOUNT WITHOUT AUTHORIZATION FROM THE ARCHITECT OR OWNER. FAILURE TO OBTAIN AUTHORIZATION SHALL INVALIDATE ANY CLAIM FOR ADDITIONAL COMPENSATION.

DRAWING INDEX

BUILDING CODES

COMPLY WITH ALL APPLICABLE CODES, LAWS, ORDINANCES, ORDERS, RULES, LOCAL AMMENDMENTS AND REGULATIONS OF AUTHORITIES HAVING JURISDICTION. THE FOLLOWING CODES ARE ADOPTED BY THE CITY OF SAN ANTONIO:

- 2021 International Building Code, IBC
- 2021 International Existing Building Code, IEBC
- 2021 International Residential Code, IRC
- 2021 International Fire Code, IFC
- 2021 International Mechanical Code, IMC
- 2021 International Plumbing Code, IPC
- 2021 International Fuel Gas Code, IFGC
- 2021 International Energy Conservation Code, IECC
- 2020 National Electrical Code, NEC
- 2021 San Antonio Property Maintenance Code (based on the 2018 International Property Maintenance Code)
- 2021 International Swimming Pool and Spa Code, ISPSC

DIRECTORY

ARCHITECT:
COTTON ESTES ARCHITECT PLLC
606 DAWSON STREET
SAN ANTONIO TX 78202
CE@COTTONESTESARCHITECT.COM
(401) 441-1014

STRUCTURAL ENGINEER:
CHESTER SPAULDING III, PE
SPAULDING STRUCTURAL ENGINEERING
12227 HUEBNER, STE 106
SAN ANTONIO TX 78230
CHESTER@SSE-TEXAS.COM
(210) 451-7756

MECHANICAL ENGINEER:
SONNY ERWIN, PE
MR. ERWIN INC. MECHANICAL ENG.
1008 BECKETT STREET
SAN ANTONIO TX 78213
(210) 349-4081

CONTRACTOR:
MIKE LONG
LONG HOUSE BUILDERS LLC
LONGHOUSEBUILDERS@GMAIL.COM
(207) 841-8693

SITE INFORMATION

ADDRESS:	8802 MISSION ROAD SAN ANTONIO TX 78214
ZONING:	R-6
HISTORICAL:	MISSION HISTORIC DISTRICT, RIO-6
LOT SIZE:	99,926 SQ.FT. / 2.294 ACRES
LEGAL DISCRIPTION:	NCB 11175 BLK 1 LOT 1 ARMAS DE CORTEZ SUBD

CONTEXT MAP

cotton estes architect

PROJECT TEAM:
SPAULDING STRUCTURAL ENGINEERING, INC.
12227 HUEBNER RD. SUITE 106

REVISIONS:
NO./ DATE/ DESCRIPTION

PROJECT INFORMATION:
8802 MISSION ROAD
SAN ANTONIO, TX 78214

PROJECT STATUS:
75% CONSTRUCTION DOCS 07/10/2023

NOT FOR REGULATORY APPROVAL, PERMITTING OR CONSTRUCTION

TIERRA de PAZ

PROJECT INFO SHEET

A0.0

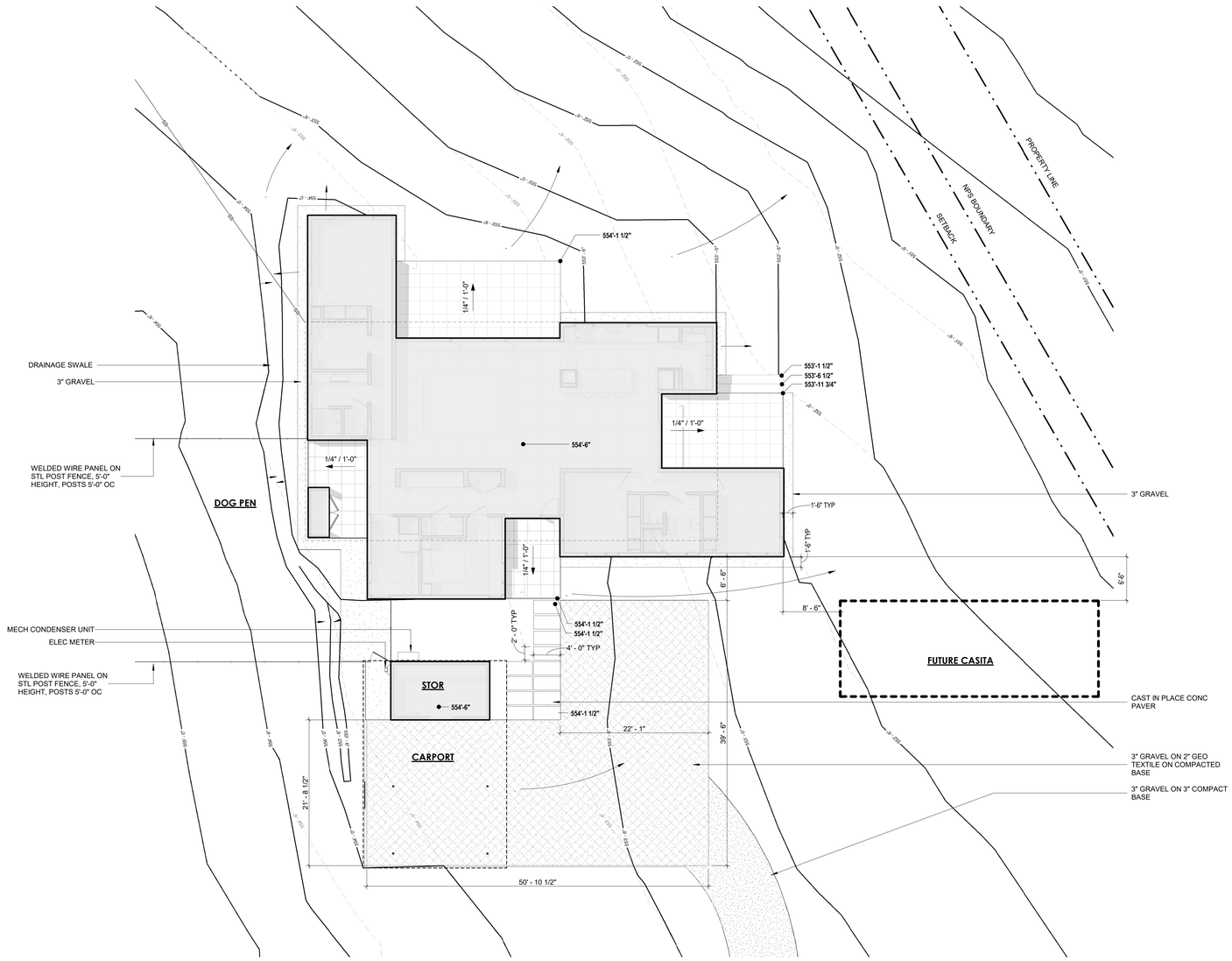

3 GRADING PLAN
SCALE: 1/8" = 1'-0"

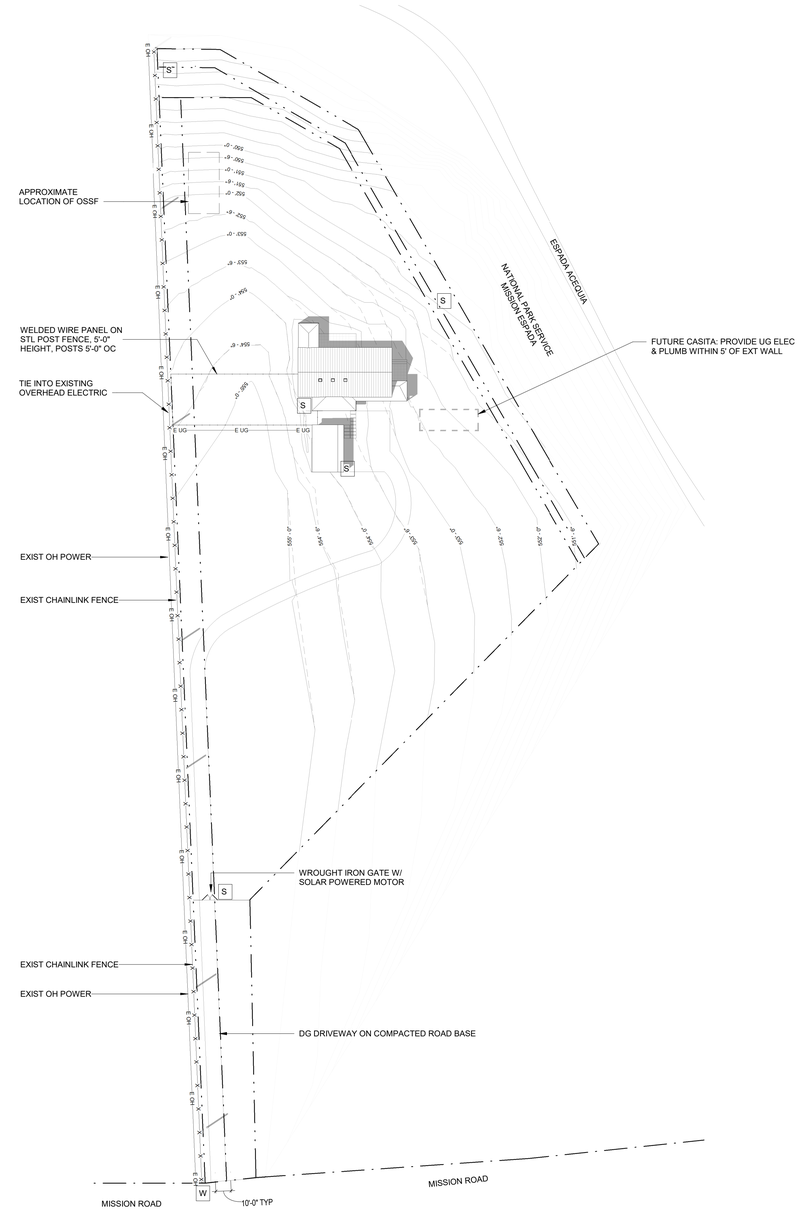

2 PROPERTY PLAN
SCALE: 1" = 40'-0"

SITE PLAN GENERAL NOTES

1 GRADING PLAN INDICATES FINISH GRADE ELEVATIONS. ROUGH GRADES TO BE 4" BELOW FINSH GRADES.
2 BUILDING DIMENSIONS ARE FOR GENERAL REFERENCE. REFER TO FLOOR PLANS AND SLAB PLAN.
3 SITE IS PRESUMED TO BE FLAT. VERIFY EXISTING GRADES IN FIELD AND REPORT TO ARCHITECT IF CONDITIONS DEVIATE SIGNIFICANTLY.
4 PROVIDE A MINIMUM OF 2% SLOPE AWAY FROM BUILDING FOUNDATION EXTENDING 2'-0" BEYOND LINE OF ROOF ABV.
5 REFER TO LANDSCAPE FOR PLANTIN AND IRRIGATION

UTILITY SYMBOLS

IRR	IRRIGATION LINE (BY OTHERS)		UTILITY POLE
SS	SANITARY	G	GAS METER
E OH	OVERHEAD ELECTRIC	E	ELEC METER
E UG	UNDERGROUND ELECTRIC	W	WATER METER
		S	SECURITY CAMERA (NIC)

cotton estes architect

PROJECT TEAM:
SPAULDING STRUCTURAL ENGINEERING, INC.
12227 HUEBNER RD. SUITE 106

REVISIONS:
NO./ DATE/ DESCRIPTION

PROJECT INFORMATION:
8802 MISSION ROAD
SAN ANTONIO, TX 78214

PROJECT STATUS:
75% CONSTRUCTION DOCS 01/13/20

NOT FOR REGULATORY APPROVAL, PERMITTING OR CONSTRUCTION

TIERRA de PAZ

SITE PLAN

A1.0

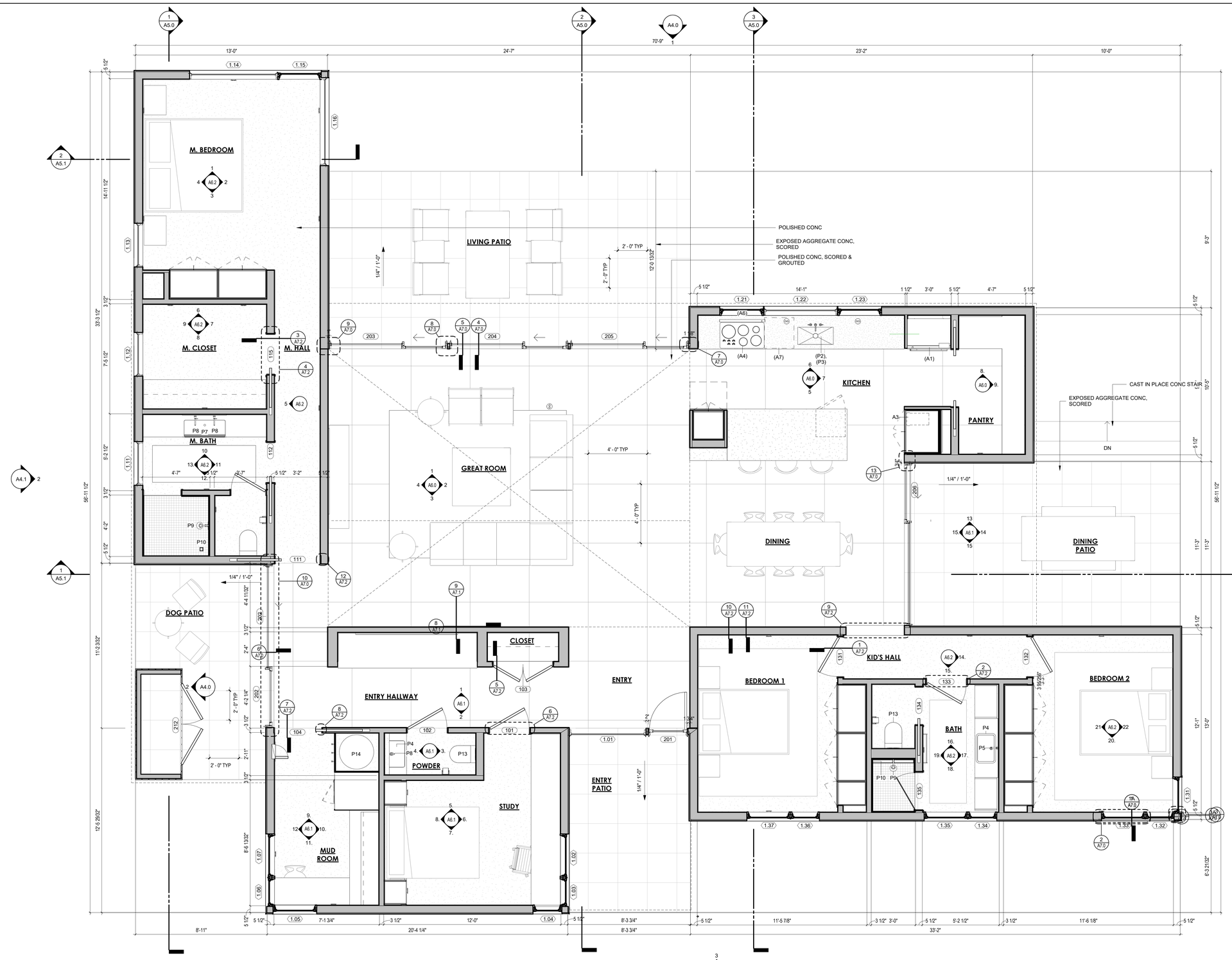

1 FLOOR PLAN
SCALE: 3/8" = 1'-0"

ASSEMBLY INSUL VALUES

EXT WOOD FRAME WALLS (2X6 24" OC):

5" OPEN CELL SPRAY FOAM (R-3.5/IN)
R-VALUE: 17.5
NET SQ.FT.: XXX SF

FLAT ROOFS (2X8 RAFTERS 24" OC):

6" CLOSED CELL SPRAY FOAM (R-7/IN)
1.5" RIGID FOAM (R-5.8/IN)
TOTAL R-VALUE: 30
NET SQ.FT.: XXX SF

PITCHED ROOFS (2X10 RAFTERS 24" OC):

10" OPEN CELL SPRAY FOAM (R-3.5/IN)
TOTAL R-VALUE: 30.5
NET SQ.FT.: XXX SF

FLOOR PLAN NOTES

1 DIMENSIONS ARE TO GRID LINE, FACE OF STUD, FACE OF CONCRETE, AND CENTERLINE OF DOOR OPENINGS, UNLESS NOTED OTHERWISE. DIMENSIONS NOTED AS "CLR" MUST BE PRECISELY MAINTAINED. DIMENSIONS ARE NOT ADJUSTABLE WITHOUT ARCHITECT'S APPROVAL UNLESS NOTED AS "+/-". VERIFY DIMENSIONS MARKED "V.I.F." PRIOR TO COMMENCEMENT OF CONSTRUCTION, AND NOTIFY ARCHITECT OF ANY INCONSISTENCIES. "ALIGN" SHALL MEAN TO ACCURATELY LOCATE FINISH FACES IN THE SAME PLANE.
2 REFERENCE AXXX FOR PARTITION TYPES. ALL PARTITIONS ARE TYPE xx UNLESS OTHERWISE NOTED. ADD FULL, ACOUSTICAL INSULATION TO ALL PARTITION TYPES ENCLOSING THESE SPACES: OFFICE, CONFERENCE ROOM, TOILET ROOMS, AND MECHANICAL ROOMS.
3 REFERENCE GXXX SERIES FOR GRAPHIC EXTENT OF FIRE RATED PARTITIONS.
4 REFERENCE A001 FOR ADDITIONAL GENERAL NOTES.
5 REFERENCE AXXX FOR FINISH SCHEDULES.
6 FURNITURE LAYOUT IS FOR "REFERENCE" ONLY.

cotton estes architect

PROJECT TEAM:
SPAULDING STRUCTURAL ENGINEERING, INC.
13227 HUEBNER RD. SUITE 106

REVISIONS:
NO./ DATE/ DESCRIPTION

PROJECT INFORMATION:
8802 MISSION ROAD
SAN ANTONIO, TX 78214

PROJECT STATUS:
75% CONSTRUCTION DOCS 06/24/2023

NOT FOR REGULATORY APPROVAL, PERMITTING OR CONSTRUCTION

TIERRA de PAZ

FLOOR PLAN

A2.0

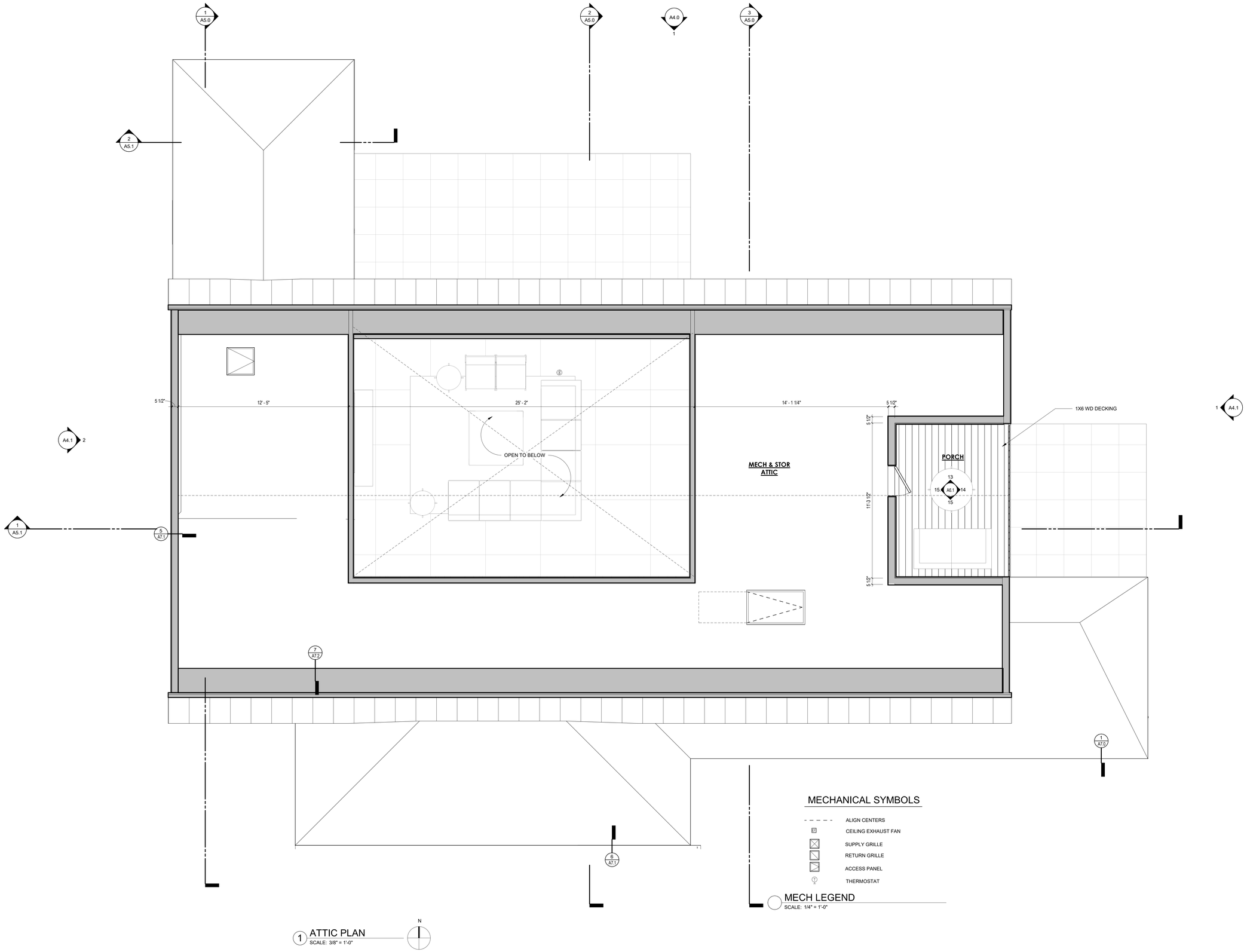

1 ATTIC PLAN
SCALE: 3/8" = 1'-0"

cotton estes architect

PROJECT TEAM:
SPAULDING STRUCTURAL ENGINEERING, INC.
12227 HUEBNER RD. SUITE 106

REVISIONS:
NO./ DATE/ DESCRIPTION

PROJECT INFORMATION:
8802 MISSION ROAD
SAN ANTONIO, TX 78214

PROJECT STATUS:
75% CONSTRUCTION DOCS 05/17/23

NOT FOR REGULATORY APPROVAL, PERMITTING OR CONSTRUCTION

TIERRA de PAZ

ATTIC PLAN

A2.1

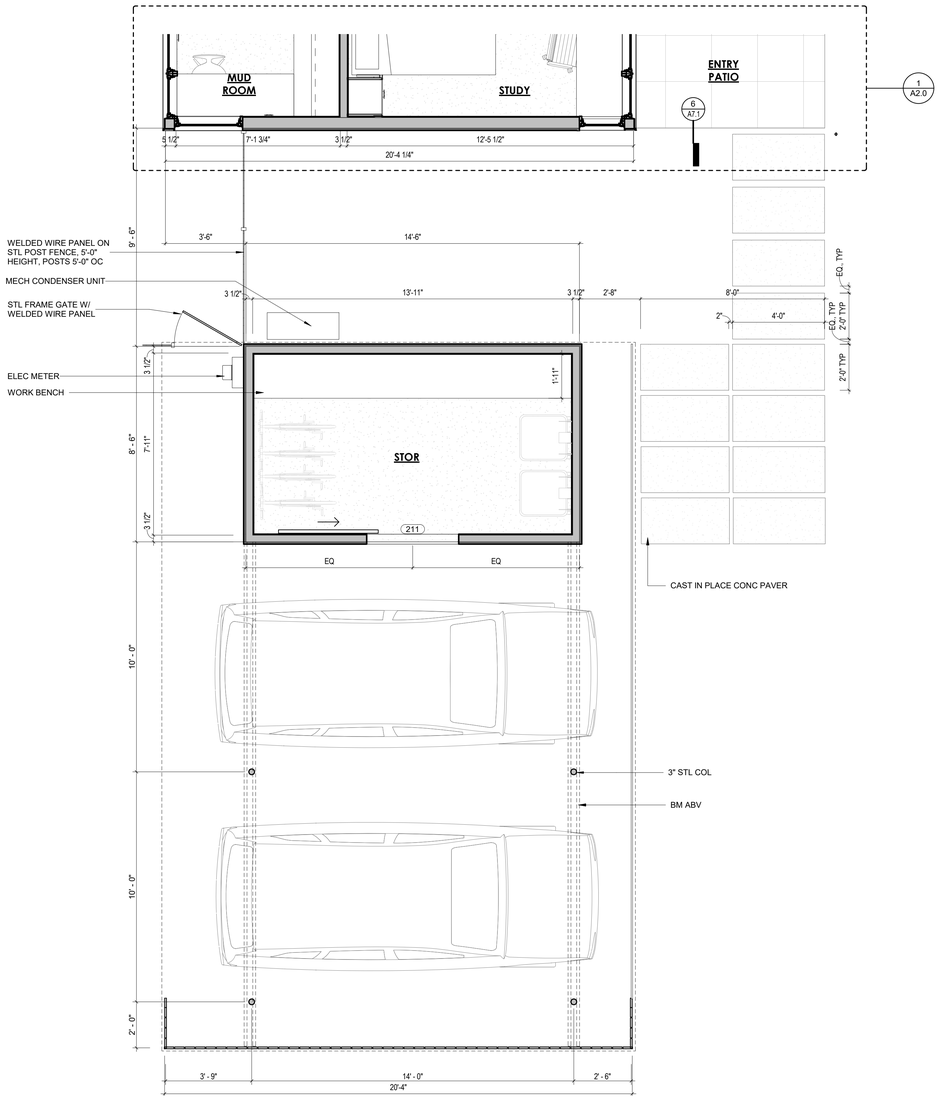

1 CARPORT PLAN
SCALE: 3/8" = 1'-0"

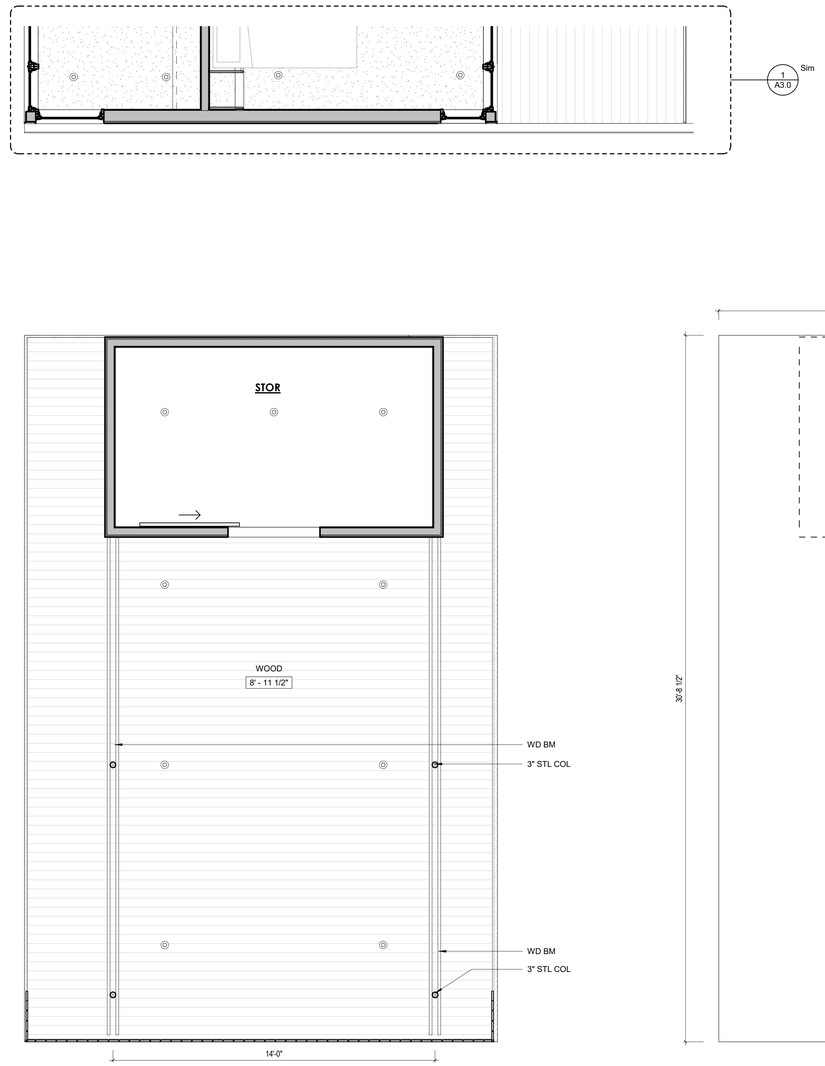

2 CARPORT RCP
SCALE: 3/8" = 1'-0"

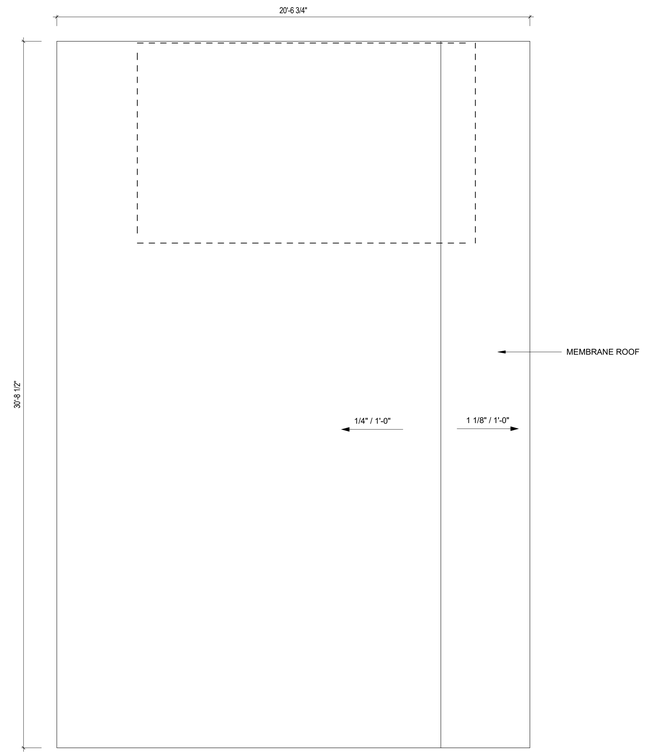

3 CARPORT ROOF PLAN
SCALE: 3/8" = 1'-0"

cotton estes architect

PROJECT TEAM:
SPAULDING STRUCTURAL ENGINEERING, INC.
12227 HUEBNER RD. SUITE 106

REVISIONS:
NO./ DATE/ DESCRIPTION

PROJECT INFORMATION:
8802 MISSION ROAD
SAN ANTONIO, TX 78214

PROJECT STATUS:
75% CONSTRUCTION DOCS 05/10/23

NOT FOR REGULATORY APPROVAL, PERMITTING OR CONSTRUCTION

TIERRA de PAZ

CARPORT

A2.2

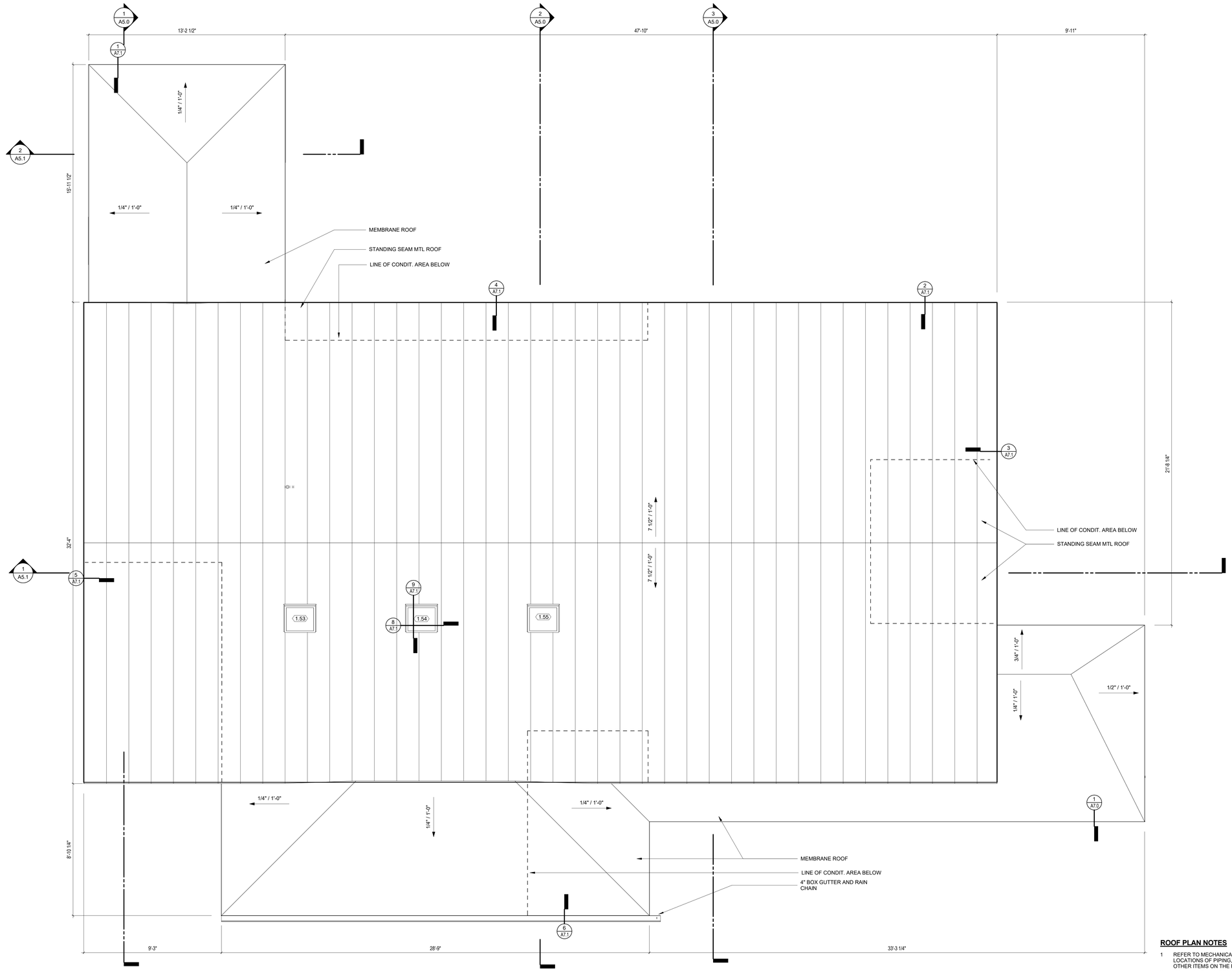

1 ROOF PLAN
SCALE: 3/8" = 1'-0"

N

ROOF PLAN NOTES

1. REFER TO MECHANICAL, PLUMING AND ELECTRICAL FOR LOCATIONS OF PIPING, CURBS, VENTS, DUCTS, FANS, AND OTHER ITEMS ON THE ROOF SURFACE.
2. PAINT EXPOSED ROOF MOUNTED EQUIPMENT, PIPING, ETC. , EXCEPT THOSE ITEMS WHICH ARE ALUMINUM OR STAINLESS STEEL COLORED AS SELECTED BY ARCHITECT.
3. ALL ROOF FLASHING TO BE ACCORDING TO MANUFACTURER'S RECOMMENDATIONS.
4. REFER TO PLUMBING DRAWINGS FOR ROOF DRAIN SIZES.
5. OVERFLOW ROOF DRAW INLETS SHALL BE 2" ABOVE THE PRIMARY DRAWN INLETS.

cotton estes architect

PROJECT TEAM:
SPAULDING STRUCTURAL ENGINEERING, INC.
12227 HUEBNER RD. SUITE 106

REVISIONS:
NO./ DATE/ DESCRIPTION

PROJECT INFORMATION:
8802 MISSION ROAD
SAN ANTONIO, TX 78214

PROJECT STATUS:
75% CONSTRUCTION DOCS 01/13/20

NOT FOR REGULATORY APPROVAL, PERMITTING OR CONSTRUCTION

TIERRA de PAZ

ROOF PLAN

A2.4

WINDOW SCHEDULE

MARK	TYPE	FRAME WIDTH	FRAME HEIGHT	SILL HEIGHT	DETAIL HEAD/ SILL	DETAIL JAMB	FRAME MATERIAL	FRAME FINISH	GLASS TYPE	MANU	HARDWARE GROUP
1.01	FIXED	5' - 2 1/4"	9' - 0 1/32"	0"	4/A9.0 SIM	7/A9.0	ALUM CLAD WD	STREAMLINE GREY/ PRIMED	DOUBLE PANE W/ ARGON, LOW-E	Weather Shield Mfg, Inc.	-
1.02	PICTURE CASEMENT - MULLED UNIT W/ 1.03	2' - 11 1/2"	4' - 11 1/2"	2' - 6"			ALUM CLAD WD	STREAMLINE GREY/ PRIMED	DOUBLE PANE W/ ARGON, LOW-E	Weather Shield Mfg, Inc.	
1.03	PICTURE CASEMENT - MULLED UNIT W/ 1.02	1' - 11 1/2"	4' - 11 1/2"	2' - 6"			ALUM CLAD WD	STREAMLINE GREY/ PRIMED	DOUBLE PANE W/ ARGON, LOW-E	Weather Shield Mfg, Inc.	
1.04	PICTURE CASEMENT	1' - 11 1/2"	4' - 11 1/2"	2' - 6"			ALUM CLAD WD	STREAMLINE GREY/ PRIMED	DOUBLE PANE W/ ARGON, LOW-E	Weather Shield Mfg, Inc.	
1.05	CASEMENT	2' - 11 1/2"	4' - 11 1/2"	2' - 6"			ALUM CLAD WD	STREAMLINE GREY/ PRIMED	DOUBLE PANE W/ ARGON, LOW-E	Weather Shield Mfg, Inc.	
1.06	PICTURE CASEMENT - MULLED UNIT W/ 1.07	1' - 11 1/2"	4' - 11 1/2"	2' - 6"			ALUM CLAD WD	STREAMLINE GREY/ PRIMED	DOUBLE PANE W/ ARGON, LOW-E	Weather Shield Mfg, Inc.	
1.07	PICTURE CASEMENT	2' - 11 1/2"	4' - 11 1/2"	2' - 6"			ALUM CLAD WD	STREAMLINE GREY/ PRIMED	DOUBLE PANE W/ ARGON, LOW-E	Weather Shield Mfg, Inc.	
1.11	PICTURE CASEMENT	2' - 11 1/2"	4' - 5 1/2"	2' - 6 1/2"			ALUM CLAD WD	STREAMLINE GREY/ PRIMED	DOUBLE PANE W/ ARGON, LOW-E	Weather Shield Mfg, Inc.	
1.12	PICTURE CASEMENT	2' - 11 1/2"	4' - 5 1/2"	2' - 6 1/2"			ALUM CLAD WD	STREAMLINE GREY/ PRIMED	DOUBLE PANE W/ ARGON, LOW-E	Weather Shield Mfg, Inc.	
1.13	PICTURE CASEMENT	2' - 11 1/2"	4' - 5 1/2"	2' - 6 1/2"			ALUM CLAD WD	STREAMLINE GREY/ PRIMED	DOUBLE PANE W/ ARGON, LOW-E	Weather Shield Mfg, Inc.	
1.14	PICTURE CASEMENT - MULLED UNIT W/ 1.15	5' - 11 1/2"	5' - 11 1/2"	2' - 0"			ALUM CLAD WD	STREAMLINE GREY/ PRIMED	DOUBLE PANE W/ ARGON, LOW-E	Weather Shield Mfg, Inc.	
1.15	CASEMENT - MULLED UNIT W/ 1.14	2' - 11 1/2"	5' - 11 1/2"	2' - 0"			ALUM CLAD WD	STREAMLINE GREY/ PRIMED	DOUBLE PANE W/ ARGON, LOW-E	Weather Shield Mfg, Inc.	
1.16	PICTURE CASEMENT	5' - 11 1/2"	5' - 11 1/2"	2' - 0"			ALUM CLAD WD	STREAMLINE GREY/ PRIMED	DOUBLE PANE W/ ARGON, LOW-E	Weather Shield Mfg, Inc.	
1.21	CASEMENT - MULLED UNIT W/ 1.22	2' - 11 1/2"	4' - 11 1/2"	3' - 0"			ALUM CLAD WD	STREAMLINE GREY/ PRIMED	DOUBLE PANE W/ ARGON, LOW-E	Weather Shield Mfg, Inc.	
1.22	CASEMENT - MULLED UNIT W/ 1.24	4' - 11 1/2"	4' - 11 1/2"	3' - 0"			ALUM CLAD WD	STREAMLINE GREY/ PRIMED	DOUBLE PANE W/ ARGON, LOW-E	Weather Shield Mfg, Inc.	
1.23	PICTURE CASEMENT	2' - 11 1/2"	4' - 11 1/2"	3' - 0"			ALUM CLAD WD	STREAMLINE GREY/ PRIMED	DOUBLE PANE W/ ARGON, LOW-E	Weather Shield Mfg, Inc.	
1.31	PICTURE CASEMENT	2' - 5 1/2"	4' - 11 1/2"	2' - 6"			ALUM CLAD WD	STREAMLINE GREY/ PRIMED	DOUBLE PANE W/ ARGON, LOW-E	Weather Shield Mfg, Inc.	
1.32	PICTURE CASEMENT - MULLED UNIT W/ 1.33	1' - 11 1/2"	4' - 11 1/2"	2' - 6"			ALUM CLAD WD	STREAMLINE GREY/ PRIMED	DOUBLE PANE W/ ARGON, LOW-E	Weather Shield Mfg, Inc.	
1.33	CASEMENT - MULLED UNIT W/ 1.32	2' - 11 1/2"	4' - 11 1/2"	2' - 6"			ALUM CLAD WD	STREAMLINE GREY/ PRIMED	DOUBLE PANE W/ ARGON, LOW-E	Weather Shield Mfg, Inc.	
1.34	PICTURE CASEMENT - MULLED UNIT W/ 1.35	1' - 11 1/2"	4' - 11 1/2"	2' - 6"			ALUM CLAD WD	STREAMLINE GREY/ PRIMED	DOUBLE PANE W/ ARGON, LOW-E	Weather Shield Mfg, Inc.	
1.35	CASEMENT - MULLED UNIT W/ 1.34	2' - 11 1/2"	4' - 11 1/2"	2' - 6"			ALUM CLAD WD	STREAMLINE GREY/ PRIMED	DOUBLE PANE W/ ARGON, LOW-E	Weather Shield Mfg, Inc.	
1.36	PICTURE CASEMENT - MULLED UNIT W/ 1.37	1' - 11 1/2"	4' - 11 1/2"	2' - 6"			ALUM CLAD WD	STREAMLINE GREY/ PRIMED	DOUBLE PANE W/ ARGON, LOW-E	Weather Shield Mfg, Inc.	
1.37	CASEMENT - MULLED UNIT W/ 1.36	2' - 11 1/2"	4' - 11 1/2"	2' - 6"			ALUM CLAD WD	STREAMLINE GREY/ PRIMED	DOUBLE PANE W/ ARGON, LOW-E	Weather Shield Mfg, Inc.	
1.53	FIXED DECK MOUNT SKYLIGHT	2' - 0"	2' - 0"				ALUM CLAD WD	STREAMLINE GREY/ PRIMED	DOUBLE PANE W/ ARGON, LOW-E	Generic	
1.54	FIXED DECK MOUNT SKYLIGHT	2' - 0"	2' - 0"				ALUM CLAD WD	STREAMLINE GREY/ PRIMED	DOUBLE PANE W/ ARGON, LOW-E	Generic	
1.55	FIXED DECK MOUNT SKYLIGHT	2' - 0"	2' - 0"				ALUM CLAD WD	STREAMLINE GREY/ PRIMED	DOUBLE PANE W/ ARGON, LOW-E	Generic	

EXTERIOR DOOR SCHEDULE

Mark	TYPE	FRAME WIDTH	FRAME HEIGHT	DETAIL HEAD/THRESH	DETAIL JAMB	PANEL PANEL THICKNESS	PANEL MATERIAL	PANEL FINISH	FRAME MATERIAL	FRAME FINISH	GLASS TYPE	MANU	HARDWARE GROUP
201	SWING	2' - 8"	9' - 0 1/32"	4/A9.0	8/A9.0	-	ALUM CLAD WD	ANNO BLACK/ PRIMED	ALUM CLAD WD	ANNO BLACK/ PRIMED	DOUBLE PANE W/ ARGON, LOW E	Weather Shield Mfg, Inc.	B
202	SLIDING	11' - 0"	9' - 0"				ALUM CLAD WD	ANNO BLACK/ PRIMED	ALUM CLAD WD	ANNO BLACK/ PRIMED	DOUBLE PANE W/ ARGON, LOW E	Weather Shield Mfg, Inc.	
203	SLIDING	8' - 0"	9' - 0"				ALUM CLAD WD	ANNO BLACK/ PRIMED	ALUM CLAD WD	ANNO BLACK/ PRIMED	DOUBLE PANE W/ ARGON, LOW E	Weather Shield Mfg, Inc.	
204	SLIDING	8' - 0"	9' - 0"				ALUM CLAD WD	ANNO BLACK/ PRIMED	ALUM CLAD WD	ANNO BLACK/ PRIMED	DOUBLE PANE W/ ARGON, LOW E	Weather Shield Mfg, Inc.	
205	SLIDING	8' - 0"	9' - 0"				ALUM CLAD WD	ANNO BLACK/ PRIMED	ALUM CLAD WD	ANNO BLACK/ PRIMED	DOUBLE PANE W/ ARGON, LOW E	Weather Shield Mfg, Inc.	
206	SLIDING	11' - 0"	9' - 0"				ALUM CLAD WD	ANNO BLACK/ PRIMED	ALUM CLAD WD	ANNO BLACK/ PRIMED	DOUBLE PANE W/ ARGON, LOW E	Weather Shield Mfg, Inc.	
211	CUSTOM WD SLAT DOOR	4' - 0"	8' - 0"				ALUM CLAD WD	ANNO BLACK/ PRIMED	ALUM CLAD WD	ANNO BLACK/ PRIMED	DOUBLE PANE W/ ARGON, LOW E	Weather Shield Mfg, Inc.	
212	CUSTOM WD SLAT DOOR	5' - 6"	7' - 0"				ALUM CLAD WD	ANNO BLACK/ PRIMED	ALUM CLAD WD	ANNO BLACK/ PRIMED	DOUBLE PANE W/ ARGON, LOW E	Weather Shield Mfg, Inc.	

INTERIOR DOOR SCHEDULE

MARK	TYPE	FRAME WIDTH	FRAME HEIGHT	DETAIL HEAD/THESH	DETAIL JAMB	PANEL PANEL THICKNESS	PANEL MATERIAL	PANEL FINISH	FRAME MATERIAL	FRAME FINISH	GLASS TYPE	MANU	HARDWARE GROUP
101	SWING	2' - 8"	7' - 0"										
102		2' - 8"	7' - 0"										
103		4' - 0"	7' - 0"										
104	SWING	3' - 2"	9' - 0"										
111	POCKET	3' - 0"	8' - 11 1/2"										
112	POCKET	2' - 8"	7' - 0"										
115	POCKET	2' - 8"	7' - 0"										
131	SWING	2' - 8"	7' - 0"										
132	SWING	2' - 8"	7' - 0"										
133	SWING	2' - 8"	7' - 0"										
134	POCKET	2' - 6"	7' - 0"										
135	CASED OPENING	2' - 6"	7' - 0"										
161	SWING	2' - 2"	6' - 0"										
180		3' - 10"	8' - 11 1/2"										
181		2' - 4"	7' - 0"										
182		2' - 6"	7' - 0"										

GENERAL NOTES WINDOW TYPES.

1 ALL WINDOWS ARE SHOWN AS VIEWED FROM THE EXTERIOR. SEE DETAILS AS KEYED ON WINDOW LEGEND FOR HEAD/SILL/JAMB CONDITIONS.
2 ALL DIMENSIONS SHOWN ARE TO OUTSIDE OF FRAME, CENTERLINE OF GNGED MULLION, OR TO FINISHED FLOOR.
3 ALL LITES LABELED WITH A "T" ON WINDOW TYPE ELEVAITONS SHALL BE TEMPERED TO MEET SAFETY REQUIREMENTS.
4 ALL ALUM CLAD WOOD WINDOWS SHALL BE MARVIN SIGNATURE ULTIMATE SERIES. ALL FIBERGLASS WINDOWS SHALL BE MARVIN SIGNATURE SERIES.
5 PROVIDE THE FOLLOWING ALUM EXTRUSIONS BY MARVIN ULTIMATE: MULLION COVER (A116). EXT FINISH TO MATCH WINDOW CLADDING
6 PROVIDE WOOD EXTENSION JAMBS BY MARVIN ULTIMATE PER SCHEDULE. INT FINISH AND SPECIES TO MATCH WINDOW FRAMES.
7 CONTRACTOR SHALL PROVIDE SHOP DRAWINGS FOR ALL WINDOWS TO BE REVIEWED BY ARCHITECT PRIOR TO FABRICAITON.
8 DOORS ARE SHOWN IN DASHED GREY ON WINDOW LEGEND FOR CLARITY. SEE DOOR SCHED. & LEGEND FOR DOORS.
9 THE WINDOW SCHEDULE IS NOT TO BE CONSIDERED AN ORDER FORM. CONTRACTOR SHALL CONFIRM ALL DIMENSIONS AND NOTATIONS TO ENSURE THEY CONFORM TO SIZES AND TYPES NOTED IN THE DRAWINGS. VERIFY ALL DIEMENSIONS IN FIELD.

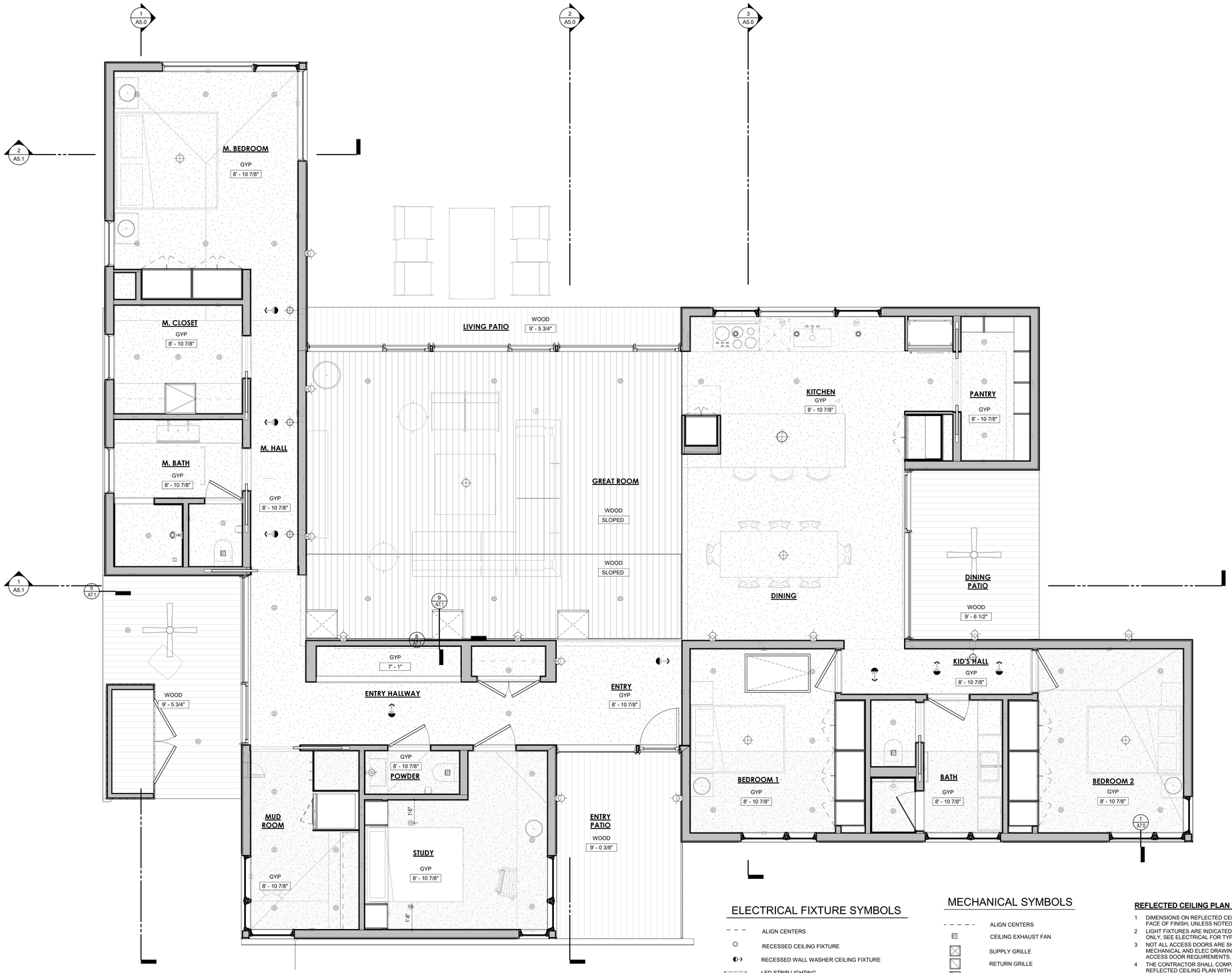

1 REFLECTED CEILING PLAN
SCALE: 3/8" = 1'-0"

ELECTRICAL FIXTURE SYMBOLS

- ALIGN CENTERS
- RECESSED CEILING FIXTURE
- RECESSED WALL WASHER CEILING FIXTURE
- LED STRIP LIGHTING
- WALL SCONCE
- DECORATIVE PENDANT & SEMI-FLUSH
- LINEAR PENDANT
- CEILING FAN

MECHANICAL SYMBOLS

- ALIGN CENTERS
- CEILING EXHAUST FAN
- SUPPLY GRILLE
- RETURN GRILLE
- ACCESS PANEL
- THERMOSTAT

REFLECTED CEILING PLAN NOTES

1. DIMENSIONS ON REFLECTED CEILING PLANS ARE TO FACE OF FINISH, UNLESS NOTED OTHERWISE.
2. LIGHT FIXTURES ARE INDICATED FOR LOCATION ONLY, SEE ELECTRICAL FOR TYPES.
3. NOT ALL ACCESS DOORS ARE SHOWN, REFER TO MECHANICAL AND ELEC DRAWINGS FOR ADDITIONAL ACCESS DOOR REQUIREMENTS.
4. THE CONTRACTOR SHALL COMPARE THIS REFLECTED CEILING PLAN WITH ELECTRICAL LIGHTING PLANS, MECHANICAL SUPPLY, RETURN, AND EXHAUST PLANS. THE CONTRACTOR SHALL REPORT ANY OMISSIONS OR INCONSISTENCES TO THE ARCHITECT.
5. RELOCATE SUPPLY DRAIN AND VENT PIPES TO MAINTAIN SCHEDULED CEILING HEIGHTS. COORDINATE RELOCATIONS WITH MEP ENGINEERS.

cotton estes architect

PROJECT TEAM:
SPAULDING STRUCTURAL ENGINEERING, INC.
12227 HUEBNER RD. SUITE 106

REVISIONS:
NO./ DATE/ DESCRIPTION

PROJECT INFORMATION:
8802 MISSION ROAD
SAN ANTONIO, TX 78214

PROJECT STATUS:
75% CONSTRUCTION DOCS 01/13/20

NOT FOR REGULATORY APPROVAL, PERMITTING OR CONSTRUCTION

TIERRA de PAZ

REFLECTED CEILING PLAN

A3.0

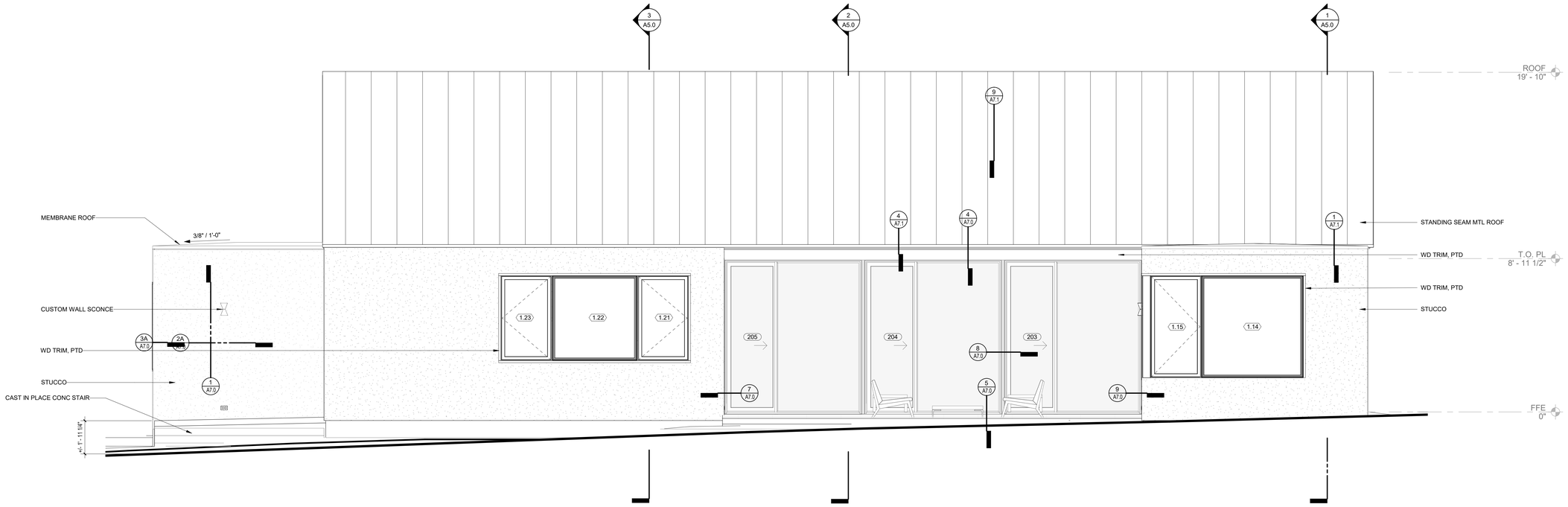

1 NORTH
SCALE: 3/8" = 1'-0"

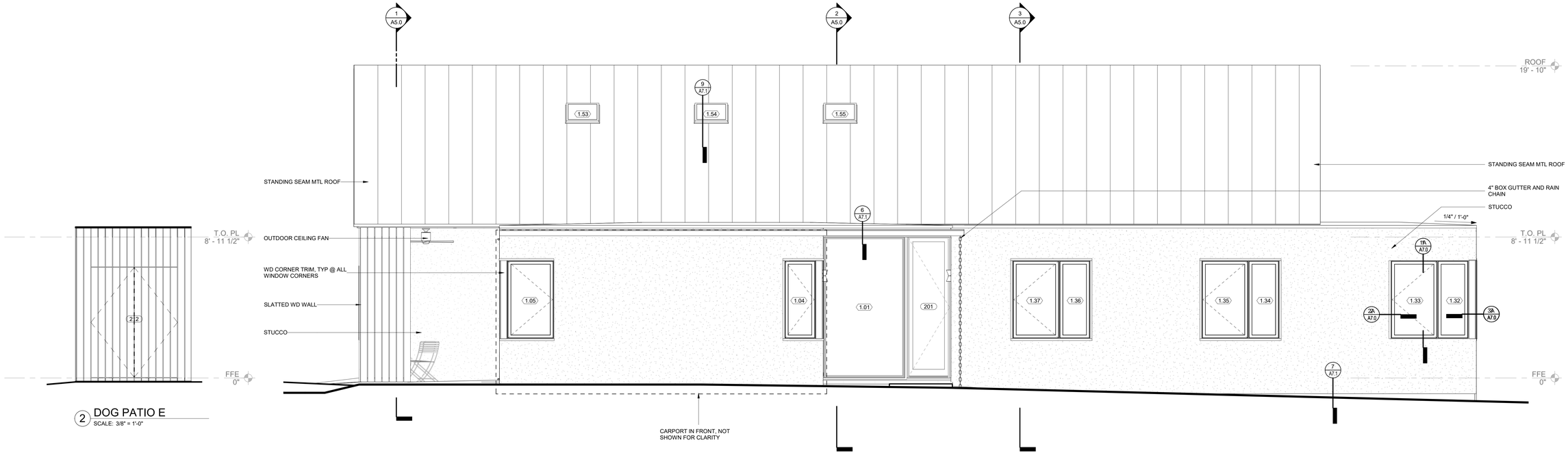

2 DOG PATIO E
SCALE: 3/8" = 1'-0"

3 SOUTH
SCALE: 3/8" = 1'-0"

cotton estes architect

PROJECT TEAM:

SPAULDING STRUCTURAL ENGINEERING, INC.
12227 HUEBNER RD. SUITE 106

REVISIONS:

NO./ DATE/ DESCRIPTION

PROJECT INFORMATION:

8802 MISSION ROAD
SAN ANTONIO, TX 78214

PROJECT STATUS:

75% CONSTRUCTION DOCS 01/13/20

NOT FOR REGULATORY APPROVAL, PERMITTING OR CONSTRUCTION

TIERRA de PAZ

EXTERIOR ELEVATIONS

A4.0

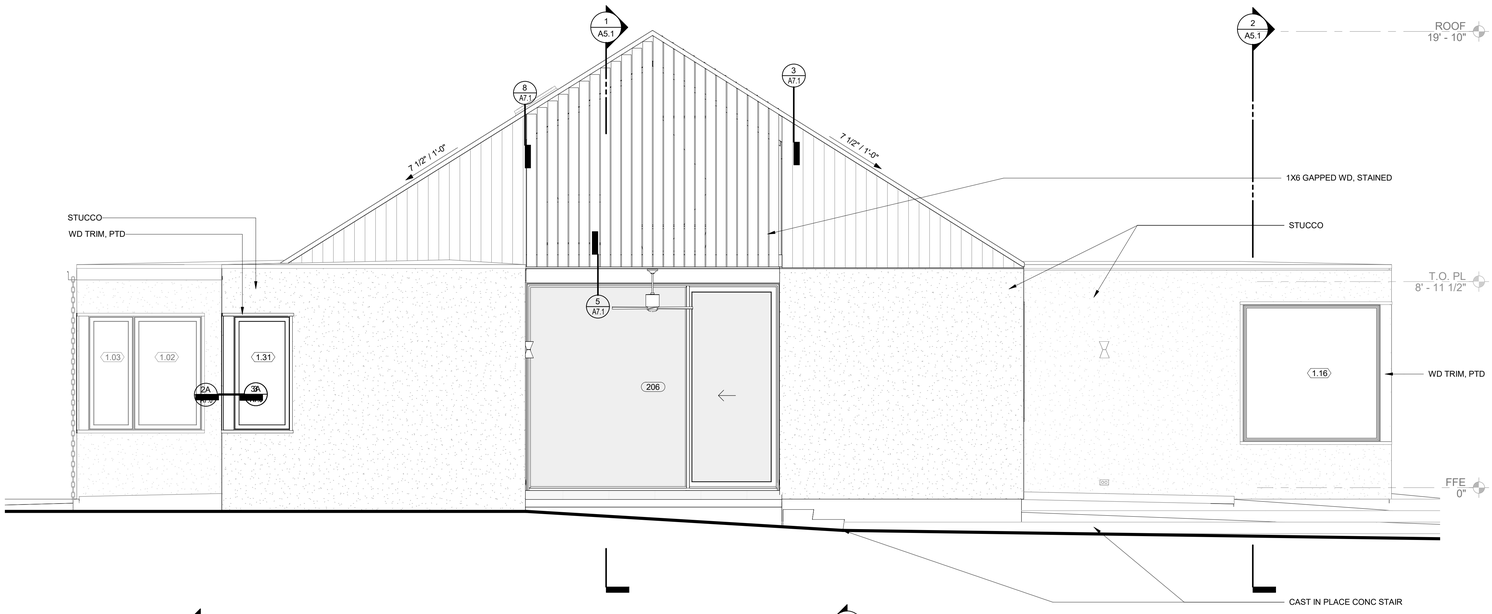

1 EAST
SCALE: 3/8" = 1'-0"

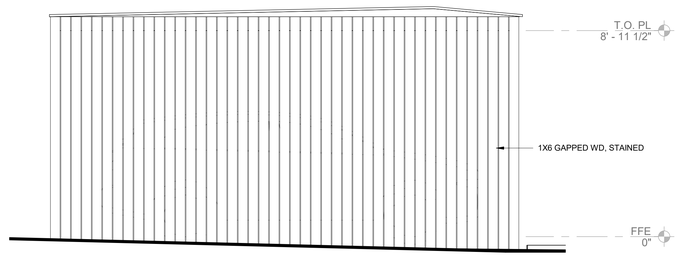

5 CARPORT SOUTH
SCALE: 3/8" = 1'-0"

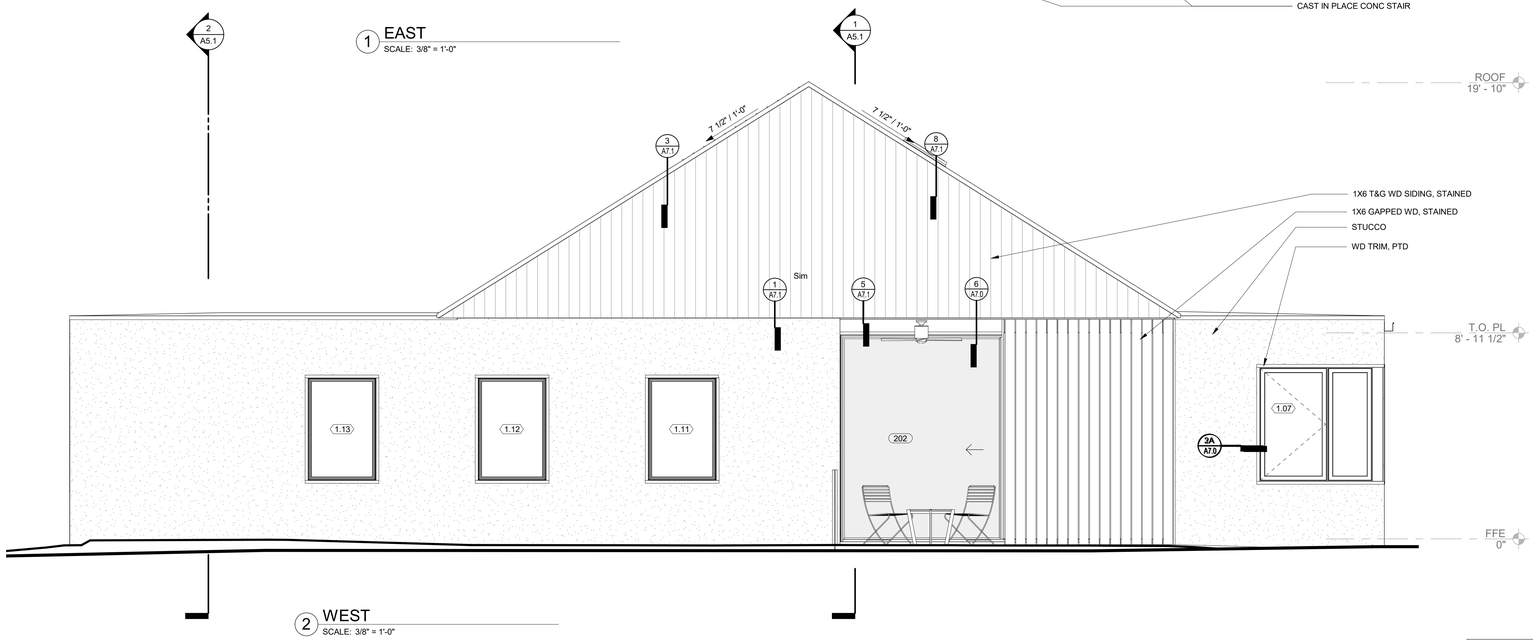

2 WEST
SCALE: 3/8" = 1'-0"

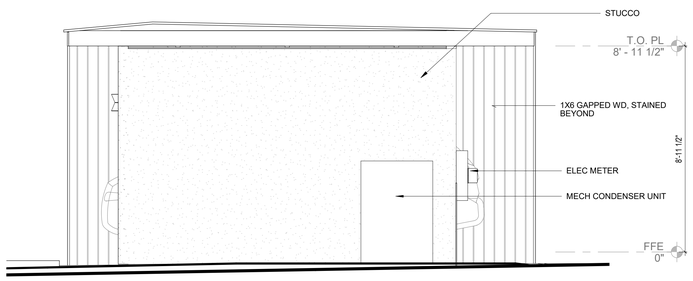

3 CARPORT NORTH
SCALE: 3/8" = 1'-0"

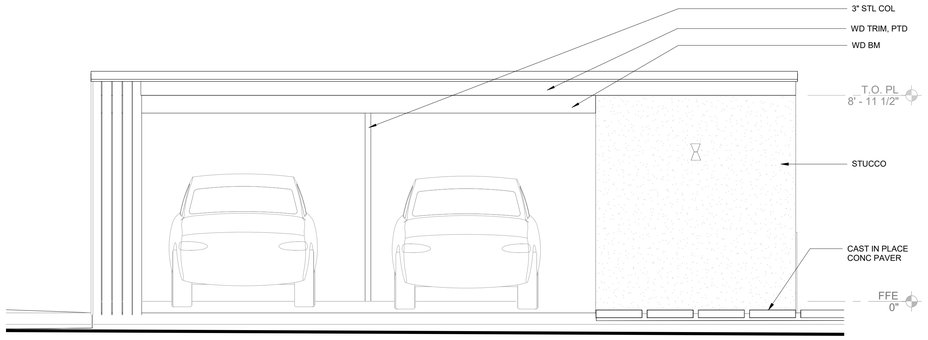

4 CARPORT EAST
SCALE: 3/8" = 1'-0"

cotton estes architect

PROJECT TEAM:
SPAULDING STRUCTURAL ENGINEERING, INC.
12227 HUEBNER RD. SUITE 106

REVISIONS:
NO./ DATE/ DESCRIPTION

PROJECT INFORMATION:
8802 MISSION ROAD
SAN ANTONIO, TX 78214

PROJECT STATUS:
75% CONSTRUCTION DOCS 01/13/20

NOT FOR REGULATORY APPROVAL, PERMITTING OR CONSTRUCTION

TIERRA de PAZ

EXTERIOR ELEVATIONS

A4.1

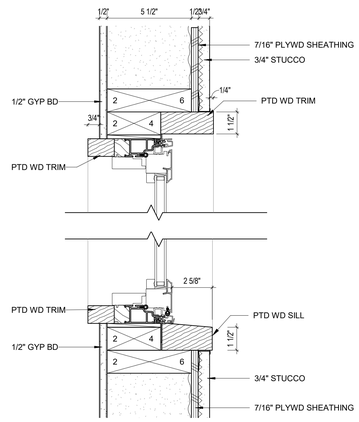

1 TYP HEAD/SILL @ WINDOW
SCALE: 3" = 1'-0"

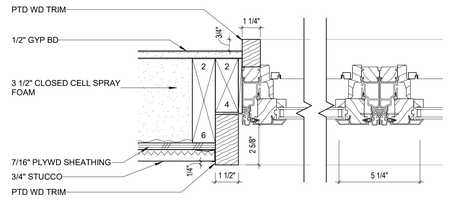

2 TYP WINDOW JAMB & VERT MULL
SCALE: 3" = 1'-0"

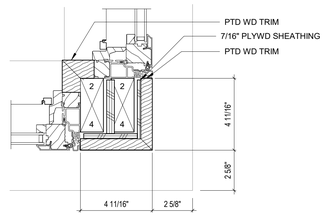

3 TYP CORNER WINDOW JAMB
SCALE: 3" = 1'-0"

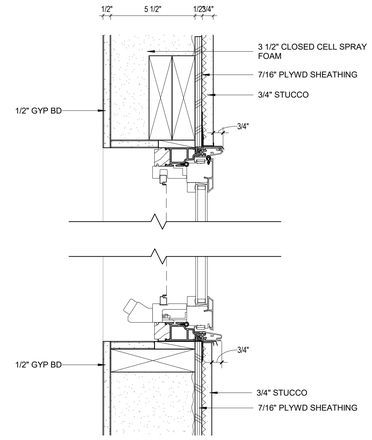

1A ALT TYP HEAD/SILL @ WINDOW-ALT
SCALE: 3" = 1'-0"

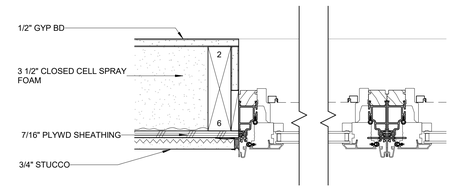

2A ALT TYP WINDOW JAMB & VERT MULL
SCALE: 3" = 1'-0"

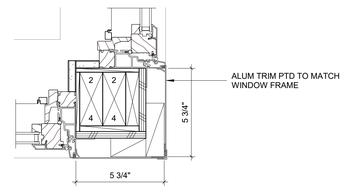

3A ALT TYP CORNER WINDOW JAMB
SCALE: 3" = 1'-0"

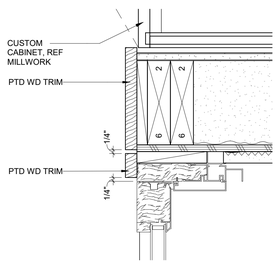

13 JAMB @ DINING ROOM SLIDER
SCALE: 3" = 1'-0"

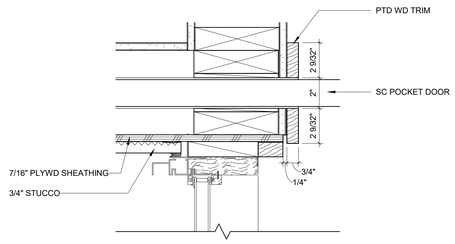

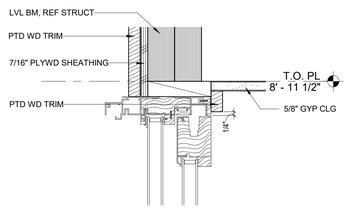

6 HEAD @ FLAT CEILING SLIDING DOOR
SCALE: 3" = 1'-0"

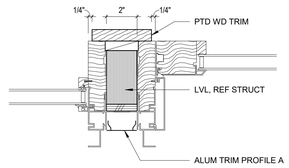

8 TYP JAMB @ SLIDING DOOR POST
SCALE: 3" = 1'-0"

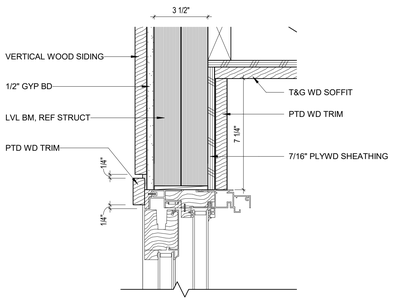

4 HEAD @ N SLIDING DOOR
SCALE: 3" = 1'-0"

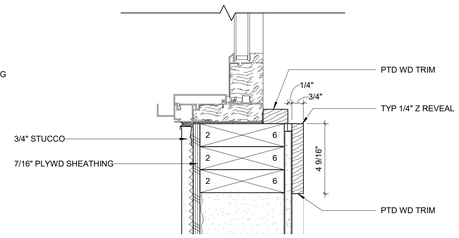

10 JAMB @ DOG PATIO SLIDER
SCALE: 3" = 1'-0"

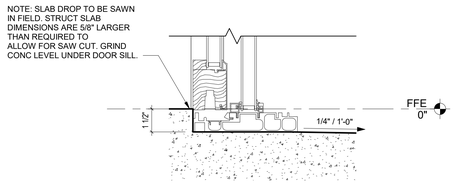

5 TYP THRESHOLD @ SLIDING DOOR
SCALE: 3" = 1'-0"

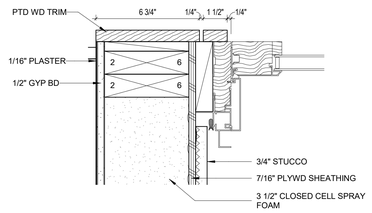

7 JAMB @ N SLIDING DOOR
SCALE: 3" = 1'-0"

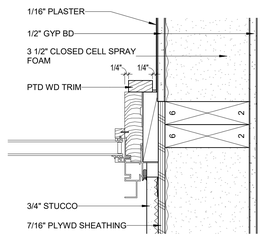

9 JAMB @ N SLIDING DOOR END WALL
SCALE: 3" = 1'-0"

cotton estes architect

PROJECT TEAM:
SPAULDING STRUCTURAL ENGINEERING, INC.
12227 HUEBNER RD. SUITE 106

REVISIONS:
NO./ DATE/ DESCRIPTION

PROJECT INFORMATION:
8802 MISSION ROAD
SAN ANTONIO, TX 78214

PROJECT STATUS:
75% CONSTRUCTION DOCS 01/13/20

NOT FOR REGULATORY APPROVAL, PERMITTING OR CONSTRUCTION

TIERRA de PAZ

DETAILS

A7.0

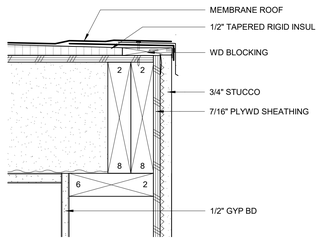

1 TYP EAVE @ LOW SLOPE ROOF
SCALE: 3" = 1'-0"

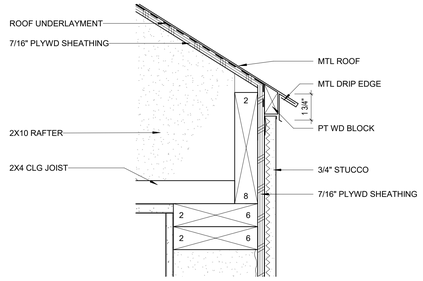

2 TYP EAVE @ METAL ROOF
SCALE: 3" = 1'-0"

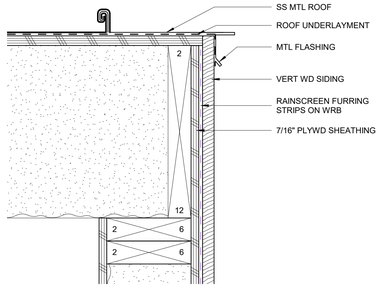

3 TYP RAKE @ MTL ROOF
SCALE: 3" = 1'-0"

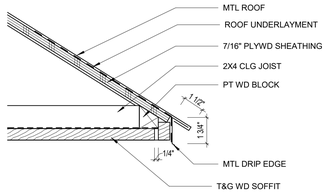

4 TYP EAVE @ COVERED PATIO
SCALE: 3" = 1'-0"

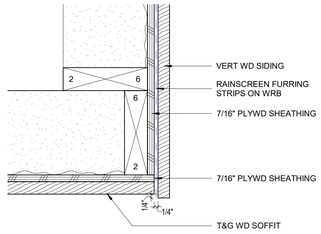

5 TYP RAKE @ COVERED PATIO
SCALE: 3" = 1'-0"

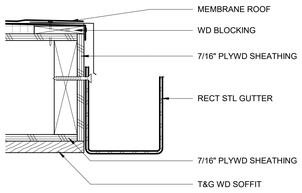

6 EAVE @ ENTRY
SCALE: 3" = 1'-0"

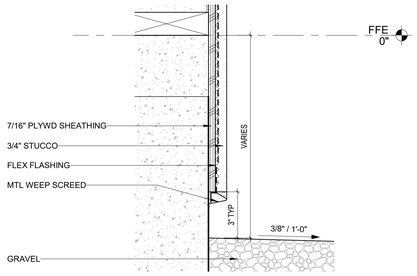

7 TYP BASE @ STUCCO WALL
SCALE: 3" = 1'-0"

8 JAMB @ SKYLIGHT
SCALE: 3" = 1'-0"

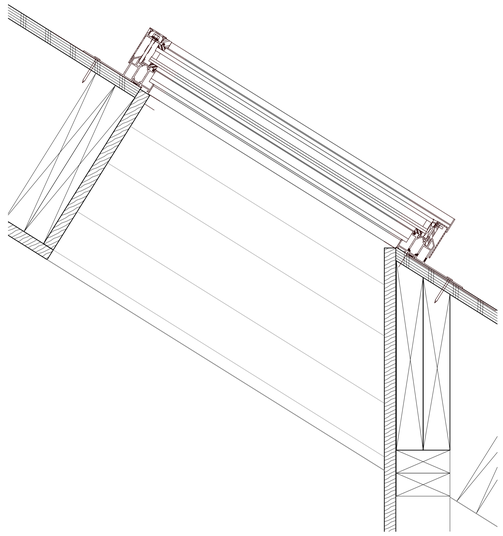

9 HEAD/SILL @ SKYLIGHT
SCALE: 3" = 1'-0"

cotton estes architect

PROJECT TEAM:
SPAULDING STRUCTURAL ENGINEERING, INC.
12227 HUEBNER RD. SUITE 106

REVISIONS:
NO./ DATE/ DESCRIPTION

PROJECT INFORMATION:
8802 MISSION ROAD
SAN ANTONIO, TX 78214

PROJECT STATUS:
75% CONSTRUCTION DOCS 01/13/20

NOT FOR REGULATORY APPROVAL, PERMITTING OR CONSTRUCTION

TIERRA de PAZ

DETAILS

A7.1

The proposed window detail evokes the trimless, minimal masonry openings found in historical agragrian structures surrounding the missions. The painted aluminum jamb projects 3/4" beyond the face of masonry, providing relief and shadow lines that distinguish the window frame from the masonry. This detail does not require wood trim, which is consistent with all other stucco wall details.

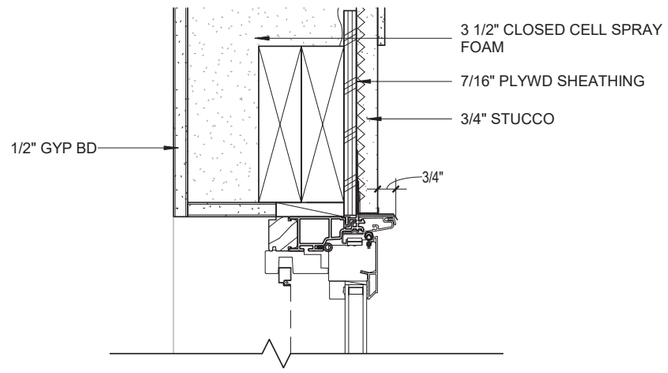

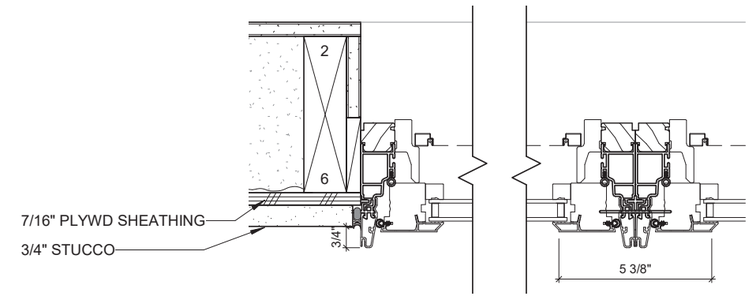

2A JAMB VERSION A
SCALE: 3" = 1'-0"

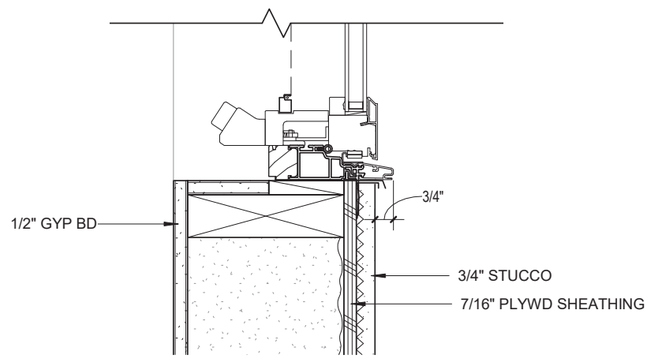

A1 HEAD/ SILL VERSION A
SCALE: 3" = 1'-0"

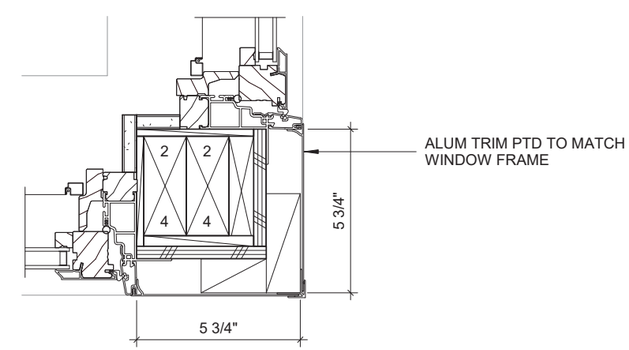

3A CORNER JAMB VERSION A
SCALE: 3" = 1'-0"

Proposed Window Detail

8802 MISSION ROAD

MISSION HISTORIC DISTRICT
CONSTRUCTION DOCUMENTS
HDRC COA APPLICATION

This alternative window detail provides a min. 2" offset between the face of wood trim, and recessed face of window sash. This detail requires significantly more complicated framing, and more closely resembles a wood-trimmed detail you might find on a wood clad structure. The trim projects 1/4" beyond face of stucco siding, casting a slight shadow line that distinguishes the stucco from the trim. This window detail would be the only instance of wood trim used on top of stucco walls in this project.

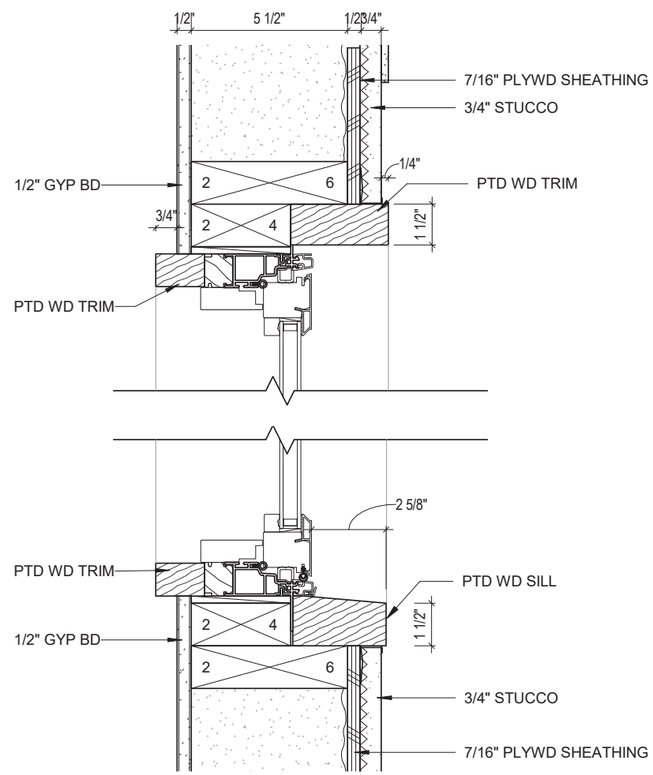

B1 HEAD/SILL VERSION B
SCALE: 3" = 1'-0"

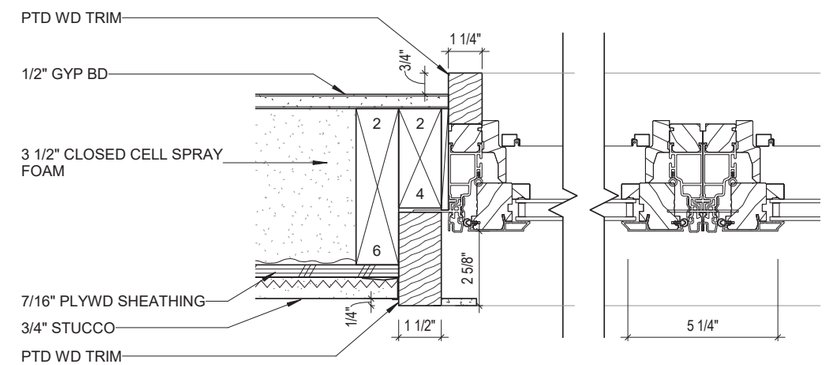

B2 JAMB VERSION B
SCALE: 3" = 1'-0"

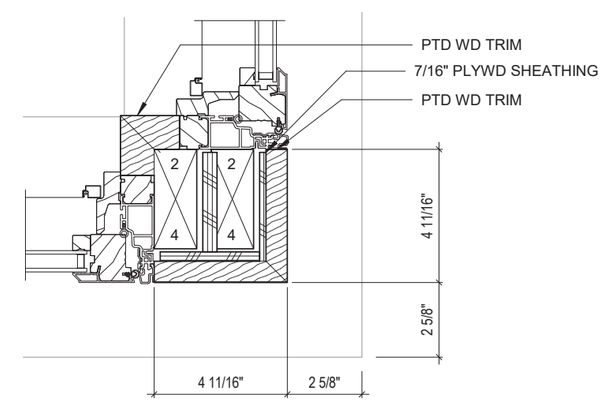

B3 CORNER JAMB VERSION B
SCALE: 3" = 1'-0"

Alternate Window Detail

8802 MISSION ROAD

MISSION HISTORIC DISTRICT
CONSTRUCTION DOCUMENTS
HDRC COA APPLICATION